POWER GRID BANGLADESH PLC

Tender Documents
For
Procurement of

Power Transmission Strengthening and Integration of Renewable Energy Project (PTSIREP)

Design, Supply, Installation, Testing & Commissioning of 230/132/33 kV AIS Substation at Madhabpur and Monohardi including two nos. 132KV bay extension at Bajitpur 132/33kV grid substation and associated 230kV and 132kV Transmission Lines on turnkey basis (Package-2).

Volume 2 of 3 [Transmission Line Part]

Invitation for Tenders No.	:	27.21.0000.101.07.429.25.4270, Dated September 16, 2025
OCB No.	:	**POWERGRID/ADB/PTSIREP/230kV Monohardi & Madhabpur SS/Package-2**
Country	:	Peoples Republic of Bangladesh

Employer:

Power Grid Bangladesh PLC
Grid Bhaban, Avenue-03, Jahurul Islam City
Aftabnagar, Badda, Dhaka-1212, Bangladesh

Contents of the Tender Documents

Volume 1

Section I. Instructions to Bidders (ITB)
Section II. Bid Data Sheet (BDS)
Section III. Evaluation and Qualification Criteria
Section IV. Bidding Forms
Section V. Eligible Countries
Section VI. Employer's Requirements
Section VII. General Conditions of Contract (GCC)
Section VIII. Special Conditions of Contract (PCC)
Section IX. Contract Forms

Volume 2

Scope of Works
Technical Specifications
Drawings forming Part of the Specification

Volume 3

Schedule A: Introduction & Preamble to the Price & Technical Schedules
Schedule B: Bid Prices & Schedules
Schedule C: Bar Chart Program of Key Activities-Delivery & Completion Time Schedule
Schedule D: Manufacturers, Places of Manufacture and Testing
Schedule E: Technical Particulars and Guarantees
Schedule F: Proposed Subcontractors

Table of Contents | Page

SCOPE OF WORKS 1-1

1. Scope of Works and General Information 1-1

1.1 General 1-1
1.2 Extent of Supply 1-1
1.3 Details of Transmission Line Routes and Terrain 1-3
1.4 Location Details and Terminal Points 1-3
1.5 Estimated and Final Quantities 1-4
1.6 Modifications 1-4
1.7 Terminal Points 1-4
1.8 Programme of Work 1-4
1.9 Safety Measures 1-5
1.10 Coordination and Cooperation with other Contracts 1-5
1.11 Inspection 1-5
Annex 1-1: Scope and Extent of Definite Works 1-6

TECHNICAL SPECIFICATIONS 1-1

2. Site Particulars 2-1

2.1 General 2-1
2.2 Location 2-1
2.3 Climatic Conditions 2-1
Annex 2-1: Climatic Conditions 2-2

3. Quality Assurance 3-1

3.1 General 3-1
3.2 Quality Assurance Program 3-1
3.3 Quality Plan 3-2
3.4 Equivalent Standards 3-2
3.5 Quality Control 3-2
3.5.1 Inspection and Testing 3-2
3.5.2 Type, Sample and Routine Tests 3-3
3.5.3 Certificate of Conformity 3-3
3.6 Non-Conforming Products 3-3
3.7 Monitoring of Quality Assurance Arrangements 3-3
3.8 Suppliers and Subcontractors 3-3
3.9 Method Statements 3-4
Annex 3-1: Notification and Hold Points 3-5
Annex 3-2: Reference Standards 3-5
Annex 3-3: Certificate of Conformity 3-5
Annex 3-4: Engineering Documents to be submitted by the Contractor 3-6
Annex 3-5: Field Quality Plan for Transmission Lines 3-7
Annex 3-6: Acceptance Criteria and Permissible Limits 3-15
Annex 3-6(1): Acceptance Criteria and Permissible Limits for Cement 3-15
1. Mechanical and physical requirements given as characteristic values 3-15
Annex 3-6(2): Acceptance Criteria and Permissible Limits for Reinforcement Steel 3-16
Annex 3-6(3): Acceptance Criteria and Permissible Limits for Coarse Aggregate 3-17
Annex 3-6(4): Acceptance Criteria and Permissible Limits for Fine Aggregate 3-18

Table of Contents Page

Annex 3-6(5): Acceptance Criteria and Permissible Limits for Concrete Work 3-19
Annex 3-7: Approximate Positions of Towers 3-1

4. Design Particulars 4-1

4.1 Philosophy of Design 4-1
4.2 Units of Measurement 4-1
4.3 Document Submission 4-1
4.4 Design Calculations 4-1
4.5 Drawings 4-2
4.5.1 General Requirements 4-2
4.5.2 Computer Generated Drawings/Designs 4-3
4.5.3 Contract Drawing List 4-3
4.5.4 Contract Record Drawings 4-3
4.5.5 Route Maps 4-4
4.6 Sag Templates (not used) 4-4
4.7 Supply and Installation Material Manual (SIMM) 4-4
4.8 Maintenance Manual 4-5
4.9 Samples and Models 4-5
4.10 Photographs 4-5
Annex 4-1: Time Intervals for Document Submission, Test and Inspection Notification, and Number of Submission Copies 4-7
Annex 4-2: Engineering Documents to be submitted by Contractor 4-8
Annex 4-3: Notification and Hold Points 4-8
Annex 4-4: Reference Standards 4-8

5. Access 5-1

5.1 Wayleaves 5-1
5.1.1 General 5-1
5.1.2 Wayleave Schedule (not applicable) 5-1
5.2 Access to Site, Notice of Entry 5-1
5.2.1 Access Routes - General 5-1
5.2.2 Commencement of Work 5-2
5.2.3 Suspension of Work 5-2
5.2.4 Compliance with Occupier's Requirements 5-2
5.2.5 Notice to Authorities 5-2
5.3 Route Clearance 5-2
5.4 Access Roads 5-2
5.5 Crossing of Obstacles 5-3
5.5.1 General 5-3
5.5.2 Public Utilities 5-3
5.5.3 Scaffolding 5-4
5.5.4 Live Line Scaffolds 5-4
5.5.5 Live Line Scaffolds - Construction 5-4
5.6 Damage 5-6
5.6.1 General 5-6
5.6.2 Contractor's Responsibility 5-6
5.6.3 Livestock, Dogs 5-6
Annex 5-1: Route Clearance 5-7

Table of Contents Page

Annex 5-2: Access Roads 5-7
Annex 5-3: Engineering Documents to be Submitted by Contractor 5-7
Annex 5-4: Notification and Hold Points 5-8
Annex 5-5: Reference Standards 5-8

6. Survey, Profile, Geotechnical Investigations and Field Quality Plan 6-1

6.1 General Information & Scope of Work 6-1
6.2 Contractor's Survey 6-2
6.2.1 Access for Survey 6-2
6.2.2 Survey Methodology & Precision 6-2
6.2.3 Route Alignment 6-3
6.2.4 Detailed Survey 6-5
6.2.5 Route Marking 6-5
6.2.6 Profiling 6-6
6.2.7 Optimization of Tower Location / Tower Spotting 6-6
6.2.8 Tower Spotting 6-6
6.2.9 Clearance from Ground, Building, Trees etc. 6-8
6.2.10 Preliminary Schedule 6-9
6.2.11 Profile Drawings - Size & Scales 6-9
6.2.12 Profile Drawings-Details 6-9
6.2.13 Check Survey 6-10
6.2.14 Survey Report 6-11
6.3 Geotechnical Investigation 6-12
6.3.1 General 6-12
6.3.2 Scope 6-12
6.3.3 General Requirements 6-13
6.4 Field Investigation for Soils 6-14
6.4.1 Boring 6-14
6.4.2 Standard Penetration Test (SPT) 6-15
6.4.3 Sampling 6-16
6.4.4 Ground Water 6-17
6.4.5 Vane Shear Test (Required for Boreholes where Undisturbed Sampling is not possible - Only at Special Locations) 6-18
6.5 Laboratory Testing 6-18
6.5.1 Essential Requirements 6-18
6.5.2 Tests 6-19
6.5.3 Salient Test Requirement 6-19
6.6 Test Level 6-19
6.6.1 Level 1 6-19
6.6.2 Level 2 6-20
6.6.3 Level 3 6-20
6.6.4 Level 4 6-20
6.7 Geotechnical Investigation Report 6-21
6.7.1 General 6-21
6.7.2 Data to be furnished 6-21
6.7.3 Recommendations 6-23
6.7.4 Hydro-geological Conditions 6-24
6.8 Morphological Study of Rivers 6-25

Table of Contents Page

6.9 Rates and Measurements 6-25
6.9.1 Rates 6-25
6.10 Field Quality Plan 6-25
6.11 Foundation Setting Level Diagrams 6-26
Annex 6-1: Crossing of Obstacles 6-27
Annex 6-1(1): Basic External Clearance 6-27
Annex 6-1(2): Clearance from Electric Lines 6-28
Annex 6-1(3): Crossing of Pipelines 6-28
Annex 6-2: Geotechnical Investigation 6-28
Annex 6-3: Soil Classification by United Soil Classification System 6-29
Annex 6-4: Engineering Documents to be Submitted by the Contractor 6-30
Annex 6-5: Notification and Hold Points 6-30
Annex 6-6: Reference Standards 6-30

7. Foundations 7-1

7.1 7.1 SCOPE 7-1
7.2.7 Concrete Mix Design 7-7
7.3 CONSTRUCTION OF TOWER FOUNDATION, STUB SETTING AND EARTHING 7-8
7.3.2 Construction of Bored Cast In-Situ Pile foundation 7-10
7.3.2.1 General Requirement 7-10
7.3.2.2 Site Preparation 7-11
7.3.2.3 Reference Points and Bench Marks 7-11
7.4 MATERIALS 7-11
7.4.1 Concrete 7-11
7.4.2 Potential Alkali Reactivity 7-12
7.4.3 Reinforcement 7-12
7.4.4 Reinforcing Bar Coupler 7-13
7.4.5 Spacers 7-13
7.4.6 Tying Wire 7-13
7.4.7 Anchor Tendons 7-13
7.4.8 Gabion Baskets 7-13
7.4.9 Holding Down Bolts 7-13
7.4.10 Piles 7-13
7.4.11 Stubs 7-13
7.4.12 Earthing 7-14
7.5 WORKMANSHIP 7-14
7.5.1 General 7-14
7.5.2 Site Working Area 7-14
7.5.3 Supports of Excavation 7-14
7.5.4 Use of Explosives 7-15
7.5.5 Reinforcement 7-16
7.5.6 Concrete Trial Mixes 7-18
7.5.7 Batching 7-18
7.5.8 Workability 7-19
7.5.9 Blinding Concrete 7-19
7.5.10 Formwork 7-19
7.5.11 Placing and Compacting 7-19

	7.5.12	Joints	7-20
	7.5.13	Curing and Protection	7-20
	7.5.14	Grouting of Anchor Tendons	7-21
	7.5.15	Drilled Shaft piled Foundations	7-21
	7.5.16	Stub Setting	7-21
	7.5.17	Backfilling of Foundations	7-22
	7.5.18	Site Clearance	7-22
	7.5.19	Reinstatement of Working Areas	7-22
	7.5.20	Site Stabilisation	7-23
	7.5.21	Site Protection	7-23
	7.5.22	Protection of Tower and Tower Footing	7-23
	7.5.23	Earthing	7-24
7.6	PROTECTIVE TREATMENT		7-24
	7.6.1	Galvanising	7-24
	7.6.2	Epoxy Coal Tar Paint	7-24
	7.6.3	Epoxy Coated Reinforcement	7-25
	7.6.4	Tower Steelwork and Stub-Concrete Interface	7-25
	7.6.5	Earthing Material	7-25
	7.6.6	Protection of Buried Steelwork	7-26
7.7	QUALITY CONTROL		7-26
	7.7.1	General	7-26
	7.7.2	Bentonite Slurries	7-26
	7.7.3	Reinforcement	7-26
	7.7.4	Inspection Prior to Concreting	7-26
	7.7.5	Trial Mixes	7-27
	7.7.6	Workability	7-27
	7.7.7	Setting Out Tolerance	7-28
	7.7.8	Foundation Setting Tolerances	7-28
	7.7.9	Backfilling	7-29
	7.7.10	Foundation Tests - General	7-29
	7.7.11	Concrete Pad & Chimney Foundation - Tests	7-30
	7.7.12	Piled Foundation - Tests	7-30
	7.7.13	Integrity Testing	7-30
	7.7.14	Earthing Resistance Test	7-30
	7.7.15	Protective Coatings	7-31
7.8	RATES AND MEASUREMENT		7-31
	7.8.1	Open cast Foundation	7-31
	7.8.2	Pile Foundation	7-32

Annex 7-A2 (1): Foundation Overload Factor: 400kV Quad Finch or equivalent Double Circuit Towers- Not used 7-36

Annex 7-A2 (2): Foundation Overload Factor: 400kV Twin Finch Double Circuit Towers - Not used 7-36

Annex 7-A2 (3): Foundation Overload Factor: 230kV Twin Mallard Double Circuit Towers (High Wind Zone) - Not used 7-37

Annex 7- A2 (4): Foundation Overload Factor: 230kV Twin Mallard Double Circuit River Crossing Towers (High Wind Zone) - Not used 7-37

Annex 7- A2 (5): Foundation Overload Factor: 230kV Twin Mallard Double Circuit Towers (Medium Wind Zone) 7-37

Table of Contents Page

Annex 7- A2 (6): Foundation Overload Factor: 230kV Twin Mallard Four Circuit Towers 7-38

Annex-7.A2 (7): Foundation Overload Factor: 132 kV Single Grosbeak Double Circuit Towers (Narrow Base) 7-38

Annex 7- A2 (8): Foundation Overload Factor: 132kV Single Grosbeak Four Circuit Towers 7-38

8. Towers 8-1

8.1 Scope 8-1
- 8.1.1 Classes of Towers 8-1
- 8.1.2 Designation of Tower Types 8-1
- 8.1.3 Standard Height Towers 8-1
- 8.1.4 Extensions 8-1
- 8.1.5 Span Criteria 8-2
- 8.1.6 Minimum Conductor Weight at Intermediate Tower 8-2
- 8.1.7 Angle Towers 8-2
- 8.1.8 Terminal Towers 8-2

8.2 Design 8-3
- 8.2.1 General 8-3
- 8.2.2 Attachments to Towers 8-3
- 8.2.3 Stubs 8-5
- 8.2.4 Design Criteria 8-5
- Unless otherwise mentioned in the bidding documents, tower structural loading shall be in accordance with ASCE 74-2009 and tower design shall be in accordance with ASCE 10-97/ASCE 10-15. 8-5
- 8.2.5 Load Case and Load Combination 8-5
- 8.2.6 Downlead Tensions 8-8
- 8.2.7 Down Droppers to Substation Equipment 8-8
- 8.2.8 Allowable Ultimate Unit Stresses 8-9
- 8.2.9 Member Design Criteria 8-9
- 8.2.10 Bolted Joints 8-9
- 8.2.11 Electrical Clearances - Live Metal and Earthed Steelworks 8-10
- 8.2.12 Downlead Clearances 8-10
- 8.2.13 Anti-Climbing Devices 8-10
- 8.2.14 Livestock Guards 8-11
- 8.2.15 Bird Guards 8-11
- 8.2.16 Bird Flight Diverters/Flappers 8-11
- 8.2.17 Access Facilities 8-11
- 8.2.18 Danger and Identification Plates 8-12
- 8.2.19 Earthwire Bonding 8-12
- 8.2.20 Earthing of Towers 8-12
- 8.2.21 Design Calculations 8-15
- 8.2.22 Fabrication Drawings 8-15
- 8.2.23 Cradle Guards 8-16

8.3 Materials 8-16
- 8.3.1 Steel 8-16
- 8.3.2 Malleable Cast Iron 8-16
- 8.3.3 Bolts, Nuts, Clevis Pins and Washers 8-17

Table of Contents	Page

8.3.4	Welding	8-17
8.3.5	Flooring	8-17
8.4	Workmanship	8-17
8.4.1	General	8-17
8.4.2	Cutting	8-18
8.4.3	Drilling and Punching	8-18
8.4.4	Presswork/Bending	8-18
8.4.5	Welding	8-19
8.4.6	Erection Marks	8-19
8.5	Protective Treatment	8-20
8.5.1	Galvanizing	8-20
8.6	Tower Erection	8-21
8.6.1	General	8-21
8.6.2	Safety	8-21
8.6.3	Site Storage	8-21
8.6.4	Damaged Steelwork	8-21
8.6.5	Damaged Galvanizing	8-22
8.6.6	Workmanship	8-22
8.6.7	Anti-Climbing Devices, Danger and Identification Plates	8-22
8.6.8	Aircraft Navigation (Obstruction Aids)	8-22
8.7	Quality Control	8-22
8.7.1	General	8-22
8.7.2	Welding	8-23
8.7.3	Castings	8-25
8.7.4	Check Erection	8-25
8.7.5	Galvanizing	8-25
8.7.6	Tolerances	8-26
8.7.7	Tests-Lattice Steel Tower	8-26
8.7.8	Certificate of Conformity	8-28
8.7.9	Quality Control after Erection	8-28
Annex 8-1: Design Parameters and Conductor System Loading		8-29
Annex 8-2: Classes of Towers		8-33
Annex 8-3: Designation & Uses of Towers		8-34
Annex 8-4(1) Support Extensions		8-36
Annex 8-4(2) Basic Dimension of Supports		8-37
(a)	400kV Towers – Not applicable	8-37
(b)	230kV Towers– Not applicable…	8-38
(c)	132kV Towers– Not applicable	8-38
Annex 8-5: Span Criteria		8-40
Annex 8-6: System Loading for Non-Pointed Crossarm Connections and Slack Spans Loads		8-42
Annex 8-7: Minimum Thickness & Diameter of Material– Not applicable		8-43
Annex 8-8: Material Strength Factor– Not applicable		8-43
Annex 8-9: Electrical Clearances - Live Metal & Earthed Steelwork, Spatial Distances and Downlead Clearances		8-44
Annex 8-10: Anti-Climbing Devices (ACD), Access Facilities, Danger & Identification Plates		8-47
Annex 8-11: Quality Control Weld Inspection Levels		8-48

Table of Contents Page

Annex 8-12: Tower Test Requirements 8-48
Annex 8-13: Foundation Reaction Forces 8-49
Annex 8-14: Engineering Documents to be Submitted by Contractor 8-63
Annex 8-15: Notification and Hold Points 8-64
Annex 8-16: Reference Standards 8-65

9. Insulators 9-1

9.1 Scope 9-1
9.2 Design 9-1
9.2.1 General 9-1
9.2.2 Electrical and Mechanical Characteristics 9-1
9.2.3 Couplings 9-1
9.2.4 Pollution 9-2
9.2.5 Zinc Sleeve 9-2
9.2.6 Insulator Protective Device 9-2
9.2.7 Low Duty Insulator Sets 9-2
9.2.8 Tension Insulator Sets-Earth End Linkages 9-2
9.3 Materials 9-2
9.4 Workmanship 9-3
9.4.1 Insulator Units 9-3
9.4.2 Identification and Marking 9-4
9.4.3 Installation Criteria 9-4
9.4.4 Erection 9-4
9.5 Protective Treatment 9-4
9.6 Quality Control 9-5
9.6.1 General 9-5
9.6.2 Type Tests 9-6
9.6.3 Sample Tests 9-9
9.6.4 Routine Tests 9-9
9.6.5 Galvanizing 9-9
9.6.6 Test Certificates 9-10
9.6.7 Certificate of Conformity 9-10
9.6.8 Installation 9-10
Annex 9-1: Insulator Types and Uses 9-11
Annex 9-3: Type Test - Pollution IEC 60507 9-20
Annex 9-4: Engineering Documents to be Submitted by Contractor 9-21
Annex 9-5: Notification and Hold Points 9-21
Annex 9-6: Reference Standards 9-22

10. Insulator and Conductor Fittings 10-1

10.1 Scope 10-1
10.1.1 Types and Uses 10-1
10.2 Design 10-1
10.2.1 General 10-1
10.2.2 Live-Line Working 10-1
10.2.3 Sag Adjusters 10-2
10.2.4 Insulator Protective Fittings: 10-2
10.2.5 Electrical and Mechanical Characteristics 10-2

Table of Contents Page

10.2.6 Suspension Clamps 10-3
10.2.7 Earthwire Suspension Clamps 10-3
10.2.8 Counterweights 10-3
10.2.9 Connectors and Joints 10-3
10.2.10 Tee Connector 10-4
10.2.11 Full Tension Joints (Dead End) 10-4
10.2.12 Full Tension Joints (Mid-Spans) 10-4
10.2.13 Non-Tension Joints 10-5
10.2.14 Repair Sleeves 10-5
10.2.15 Line Termination Fittings 10-5
10.2.16 Armour Rods 10-5
10.2.17 Jumper Weights 10-5
10.2.18 Tubular Jumpers 10-6
10.2.19 Earthwire Bonding Clamps 10-6
10.2.20 Earthwire Bond 10-6
10.3 Materials 10-6
10.3.1 Insulator and Conductor Fittings 10-6
10.3.2 Oxide Inhibiting Compound 10-7
10.4 Workmanship 10-8
10.4.1 General 10-8
10.4.2 Identification and Marking 10-8
10.4.3 Installation Criteria 10-9
10.5 Protective Treatment 10-9
10.6 Quality Control 10-10
10.6.1 General 10-10
10.6.2 Test Procedure 10-11
10.6.3 Sample Tests 10-14
10.6.4 Routine Tests 10-14
10.6.5 Test Certificates 10-15
10.6.6 Certificates of Conformity 10-15
Annex 10-1: Insulator Sets / Fittings - Types and Uses 10-16
Annex 10-2: Earthwire/OPGW Sets - Types & Uses 10-25
Annex 10-3: Conductor Joints & Clamps - Types & Uses 10-27
Annex 10-4: Engineering Documents to be Submitted by Contractor 10-33
Annex 10-5: Notification and Hold Points 10-33
Annex 10-6: Reference Standards 10-34

11. Conductors 11-1

11.1 Scope 11-1
11.1.1 Types and Uses 11-1
11.1.2 Definition 11-1
11.1.3 Sub-conductor Configuration 11-1
11.1.4 Optical Fibre Cable 11-1
11.1.5 Special Warranty for ACCC Conductor 11-1
11.2 Design 11-2
11.2.1 General 11-2
11.2.2 System Loading Conditions 11-2
11.3 Materials 11-2

Table of Contents		Page

11.3.1	Conductors	11-2
11.3.2	Conductor Grease	11-3
11.4	Workmanship	11-3
11.5	Protective Treatment	11-4
11.6	Conductor Erection	11-4
11.6.1	Method Statement	11-4
11.6.2	Conductor Lengths and Joints	11-4
Joints in Wires		11-5
11.6.3	Repair Sleeves	11-5
11.6.4	Line Terminations	11-5
11.6.5	Inelastic Extensions of Conductors	11-5
11.6.6	Sags and Tensions	11-6
11.6.7	Conductor Stringing	11-6
11.6.8	Running Out Blocks	11-7
11.6.9	Sagging	11-7
11.6.10	Earthing of Conductor During Erection (Safety)	11-7
11.6.11	Crossings Over Roads, Railways, Buildings, Structures, etc.	11-8
11.6.12	Live Line Scaffolds	11-8
11.6.13	Downleads	11-8
11.6.14	Conductor Cutting	11-8
11.6.15	Jointing	11-8
11.6.16	Surface Greasing of Conductor	11-9
11.6.17	Greasing of Bolted Interfaces	11-9
11.6.18	Inspection Holes	11-9
11.6.19	Tension Support Jumpers	11-9
11.6.20	Spacer Dampers	11-10
11.6.21	Vibration Dampers	11-10
11.6.22	Aircraft Warning Spheres	11-10
11.6.23	Earthwire Bonds	11-10
11.7	Quality Control	11-10
11.7.1	Conductors	11-10
11.7.2	Grease	11-11
11.7.3	Galvanizing	11-11
11.7.4	Aluminium Clad Steel	11-11
11.7.5	Type Tests	11-12
11.7.6	Acceptance Tests	11-13
11.7.7	Routine Test	11-15
11.7.8	Tests During Manufacture	11-16
11.7.9	Test Certificate	11-16
11.7.10	Certificate of Conformity	11-16
11.7.11	Sagging Tolerance	11-16
11.7.12	Manufacturing Tolerance	11-16
11.7.13	Jointing Competence	11-17
11.7.14	Electrical Resistance of Joints and Clamps	11-17
11.7.15	Bolt Tightness	11-17
11.7.16	Clearances	11-17
11.7.17	Final Inspection	11-17
11.7.18	Records	11-17

Table of Contents Page

Annex 11-1: Conductor - Types and Uses 11-18
Annex 11-2: Sub-conductor Configuration 11-30
Annex 11-3: Portion Conductor System Loading 11-31
Annex 11-4: Test Procedures of Conductor 11-34
Annex 11-4a: Test Procedures of Conductor 11-41
Annex 11-5: Engineering Documents to be Submitted by Contractor 11-44
Annex 11-6: Notification and Hold Points 11-45
Annex 11-7: Reference Standards 11-46

12. Vibration Dampers 12-1

12.1 Scope 12-1
12.1.1 General 12-1
12.1.2 Types and Uses 12-1
12.2 Design 12-1
12.3 Materials 12-2
12.4 Workmanship 12-3
12.4.1 General 12-3
12.4.2 Identification 12-3
12.4.3 Installation Criteria 12-3
12.5 Protective Treatment 12-3
12.6 Quality Control 12-4
12.6.1 General 12-4
12.6.2 Conductor Damage 12-4
12.6.3 Clamp Slip Test 12-4
12.6.4 Clamp Bolt Tightening Test 12-5
12.6.5 Attachment of clamp to messenger cable 12-5
12.6.6 Attachment of weights to messenger cable 12-5
12.6.7 Corona 12-5
12.6.8 Vibration Damper Characteristics 12-5
12.6.9 Damping Effectiveness 12-5
12.6.10 Fatigue 12-6
Sample Tests 12-6
12.6.11 12-6
12.6.12 Galvanizing 12-7
12.6.13 Test Certificates 12-7
12.6.14 Certificate of Conformity 12-8
Annex 12-1: Vibration Dampers Types & Uses 12-9
Annex 12-1(1): 400kV Line (Overland Portion) – Not applicable 12-9
Annex 12-1(2): 400kV Line (River Crossing Portion) – Not applicable 12-10
Annex 12-1(3): 230 kV Line – Overland Portion 12-11
Annex 12-1(4): 230 kV Line – River Crossing Portion– Not applicable 12-11
Annex 12-1(5): 132 kV Line [Overland Portion] 12-12
Annex 12-1(6): 132 kV Line [River Crossing Portion] – Not applicable 12-12
Annex 12-1(7): 132 kV Line (ACSR Finch) – Not applicable 12-13
Annex 12-2: Engineering Documents to be submitted by Contractor 12-14
Annex 12-3: Notification and Hold Points 12-14
Annex 12-4: Reference Standards 12-15

Table of Contents Page

13. Spacer Dampers 13-1

13.1 Scope 13-1
13.1.1 General 13-1
13.1.2 Types & Uses 13-1
13.2 Design 13-1
13.3 Materials 13-3
13.4 Workmanship 13-3
13.4.1 General 13-3
13.4.2 Identification 13-4
13.4.3 Installation Criteria 13-4
13.5 Protective Treatment 13-4
13.6 Quality Control 13-5
13.6.1 General 13-5
13.6.2 Conductor Damage 13-5
13.6.3 Clamp Grip 13-5
13.6.4 Visible Corona 13-6
13.6.5 Strength (Spacer Dampers Only) 13-6
13.6.6 Movement (Spacer Dampers Only) 13-6
13.6.7 Log Decrement (Spacer Dampers Only) 13-6
13.6.8 Damping/Flexible Element (Spacer Dampers Only) 13-6
13.6.9 Longitudinal (Spacer Dampers Only) 13-6
13.6.10 Sub-conductor Oscillation (Spacer Damper Only) 13-7
13.6.11 Aeolian Vibration (Spacer Dampers Only) 13-7
13.6.12 Elastomeric Bushes Resistance (Spacer Dampers Only) 13-7
13.6.13 Jumper Bonding Spacer Resistance 13-7
13.6.14 Sample Tests 13-7
13.6.15 Galvanising 13-8
13.6.16 Tests Certificates 13-8
13.6.17 Certificate of Conformity 13-8
Annex 13-1: Spacers & Spacer Dampers - Types and Uses: 400kV Overland Portion – Not applicable 13-9
Annex 13-2: Spacers & Spacer Dampers - Types and Uses: 400kV River Crossing Portion– Not applicable 13-9
Annex 13-3: Spacers & Spacer Dampers - Types and Uses: 230kV – Overland Portion 13-10
Annex 13-4: Spacers & Spacer Dampers - Types and Uses: 230kV – River Crossing Portion– Not applicable 13-10
Annex 13-4: Engineering Documents to be Submitted by Contractor 13-11
Annex 13-5: Notification and Hold Points 13-12
Annex 13-6: Reference Standards 13-12

14. OPGW and Optical Fibre Cable & Fittings 14-1

14.1 Scope 14-1
14.1.1 General 14-1
14.1.2 Types and Uses 14-1
14.2 Design 14-1
14.2.1 Reliability 14-1
14.2.2 Fibre Optic Earthwire (OPGW) 14-1

Table of Contents	Page

14.2.3	Optical Fibres	14-1
14.2.4	OPGW Fittings	14-2
14.2.5	Optical Joint Boxes	14-2
14.2.6	Fixing Clamps	14-3
14.2.7	Non-Metallic Underground Fibre Optic Cable	14-3
14.3	Materials	14-4
14.3.1	Fibre Optic Earthwire	14-4
14.3.2	Optical Joint Boxes	14-4
14.3.3	Fixing Clamps	14-4
14.4	Workmanship	14-4
14.4.1	Contract Drawings	14-4
14.5	Protective Treatment	14-4
14.5.1	Fibre Optic Earthwire	14-4
14.5.2	Ingress of Moisture	14-4
14.5.3	Optical Joint Boxes	14-5
14.6	Installation	14-5
14.6.1	General	14-5
14.6.2	Workmanship	14-5
14.6.3	Optical Fibre Joints	14-5
14.7	Quality Control	14-6
14.7.1	General	14-6
14.7.2	OPGW	14-6
14.7.3	Optical Fibres	14-8
14.7.4	Optical Joint Boxes	14-8
14.7.5	Non-Metallic Underground Fibre Optic Cable	14-8
14.7.6	Fibre Optic Cables	14-9
14.7.7	Test Certificates	14-9
14.7.8	Certificates of Conformity	14-9
14.7.9	Installation	14-9
14.8	Test Equipment	14-9
14.9	Maintenance Equipment and Tools	14-10
Annex 14-1: OPGW Design Requirements		14-11
Annex 14-2: Single Mode Optical Fibre Cable Requirements		14-11
Annex 14-3: Test Equipment		14-11
Annex 14-4: Engineering Documents to be Submitted by Contractor		14-12
Annex 14-5: Notification and Hold Points		14-12
Annex 14-6: Reference Standards		14-13
15.	**Aircraft Navigation (Obstruction Aids)**	**15-1**
15.1	Scope	15-1
15.1.1	Types and Uses	15-1
15.2	Design	15-1
15.2.1	General	15-1
15.2.2	Obstruction Lights (Solar Powered)	15-1
15.2.3	Obstruction Lights (LV powered)	15-2
15.2.4	Photo-Voltaic Cells (Solar Array)	15-2
15.2.5	Support Framework	15-3
15.2.6	Storage Batteries	15-3

Table of Contents	Page

15.2.7 Battery Enclosure 15-3
15.2.8 LV Cables 15-3
15.2.9 Aircraft Warning Spheres 15-3
15.2.10 Tower Painting 15-4
15.3 Materials 15-4
15.4 Workmanship 15-5
15.5 Protective Treatment 15-5
15.6 Installation 15-6
15.7 Quality Control 15-6
15.7.1 General 15-6
15.7.2 Galvanising 15-6
15.7.3 Test Certificates 15-6
15.7.4 Certificate of Conformity 15-7
15.7.5 Site Tests 15-7
15.7.6 Painting 15-7
Annex 15-1: Aircraft Navigation (Obstruction Aids) 15-8
Annex 15-2: Engineering Documents to be Submitted by Contractor 15-8
Annex 15-3: Notification and Hold Points 15-9
Annex 15-4: Reference Standards 15-9

16. Miscellaneous 16-1

16.1 Tools and Appliances 16-1
Annex 16-1: Tools & Appliances 16-2

17. Packing, Protection and Despatch Marking 17-1

17.1 General 17-1
17.2 Lattice Tower and Associated Steelwork 17-2
17.3 Containerisation 17-2
17.4 Conductor 17-3
17.5 Insulators 17-4
17.6 Insulator, Conductor and Ancillary Fittings 17-4
17.7 Cable 17-4
17.8 Associated Accessories 17-4

18. Method of Measurement & Payment 18-1

18.1 Introduction 18-1
18.1.1 General 18-1
18.1.2 Not used 18-2
18.1.3 Nominated Subcontractor/Supplier (not used) 18-2
18.1.4 Specialist Subcontractors (not used) 18-2
18.1.5 Quantities 18-2
18.1.6 CIF/CIP Price 18-2
18.1.7 Freight and Insurance Prices (not used) 18-2
18.1.8 Ex-works (EXW) Price 18-2
18.1.9 Local Transportation & Erection Price (not used) 18-2
18.1.10 Drawings, Reference Standards and Records 18-2
18.1.11 Test of Major Items for Quality Control 18-2
18.1.12 Instruction of Employer's Staff 18-3

Table of Contents Page

18.2 Survey 18-4
18.3 Route Clearance & Access 18-4
18.4 Foundations 18-4
18.4.1 General 18-4
18.4.2 Piled Foundations and Special Foundations 18-5
18.4.3 Flood Protection Walls (not used) 18-5
18.4.4 Miscellaneous Unit Prices 18-5
18.5 Steel Towers 18-6
18.6 Insulator Sets and Associated Fittings 18-6
18.7 Conductor and Fittings 18-7
18.8 Aircraft Navigation (Obstruction Aids) 18-7
18.9 Cables and Fittings 18-7
18.10 Miscellaneous 18-7
18.11 Payment for Work Carried out at Time and Material Rates 18-7

19. Erection / Installation of Overhead transmission lines in the areas exposed to electric field 19-1

19.1 Introduction 19-1
19.2 Foundation Installation 19-1
19.3 Gin Pole Erection 19-1
19.4 Crane Erection 19-2
19.5 Conductor Stringing 19-2
19.6 Second Circuit Installing 19-3
Annex 19-1: Requirements for Stringing the Second Circuit 19-4

20. Test on Completion 20-1

20.1 Final Construction Check 20-1
20.2 Test on Completion 20-1
20.2.1 Pre-Commissioning Testing 20-1
20.2.2 Commissioning Testing 20-2
20.2.3 Safety Measures after Final Checking 20-2
20.2.4 Line Thermographic Analysisby Helicopter / Drone (Hot-Spot) 20-2
20.2.5 Maintenance during Liability Period, prior to Final Taking-Over 20-3

21. Painting of Bottom Parts of Towers 21-1

22. Bid Drawings 22-2

22.1 The following drawings are enclosed for tender purposes 22-2
22.2 The following drawings are included in the CD. These drawings are already approved and to be considered part of this bidding document 22-3
230kV Four Circuit Towers: 22-9
22.1.1 Drawings for 132kV Transmission Lines 22-15
22.1.2 Drawings for 230kV Transmission Lines 22-22
22.1.4 Insulators 22-27

23. Reference Data 23-1

23.1 Line Route Data 23-1
23.2 Soil Investigation Report – Not applicable 23-1

SCOPE OF WORKS

1. Scope of Works and General Information

1.1 General

1.1.1. The extent of supply is described in the following clauses and in the respective sections of the specification. All work not expressly called for in the Specification, but necessary for the completion of the work shall be performed and furnished by the Contractor at no additional cost to the Employer.

1.1.2. The contract shall comprise design, manufacturing, testing, supply, insurance, delivery to site of towers, phase conductors, earthwire, OPGW including all associated fittings, complete insulator sets, phase and earthwire tension and non-tension joints and clamps, vibration dampers, spacer dampers, erection, setting to work, testing and the replacement and/or adjustment of defective material and workmanship for the duration of the warranty period detailed in the "Extent of Supply" and the associated Annex 1-1.

1.1.3. The Contract comprises **Design, Supply, Installation, Testing & Commissioning of 230kV and 132kV Transmission Lines on Turnkey Basis.**

1.1.4. Design

1.1.5. The Contract comprises of the complete design of transmission lines.

1.1.6. The Contractor has to design all towers of the line (**Not Applicable**).

1.1.7. Foundation design of all towers shall be done by the Contractor under this Contract. Foundation works for these towers are also included in the scope of this Contract.

1.1.1.1 Supply, Erection, Testing and Commissioning

The contract comprises design, supply, installation, testing and commissioning of LILO of Cumilla(N) – Shahjibazar PP 230kV double circuit transmission line at Madhabpur, LILO of Sripur – Ashuganj 230kV double circuit transmission line at Monohardi and Monohardi-Bajitpur 132kV double circuit transmission line.

1.2 Extent of Supply

1.2.1. Providing access to affordable and reliable electricity to all citizens is a national goal of the Government of Bangladesh (GoB). In 1996, the GoB split the transmission segment and formed the

Power Grid Company of Bangladesh (POWER GRID). POWER GRID is fully responsible for all transmission assets.

1.2.2. Bangladesh is facing chronic power shortages that could undermine its economic sustainability. Inadequate, irregular power and poor quality power supply were identified to be the major constraints for sustaining economic growth and development of the country.

1.2.3. POWER GRID launched a vast program for the improving and strengthening of its transmission sys- tem. The objective is expansion and strengthening of the 230kV & 132kV transmission systems. The project spreads over Habiganj and Narsingdi District.

1.2.4. The aim of the system expansion is to contribute to an efficient power transmission in POWER GRID's transmission system, to eliminate the operational bottlenecks and to provide an adequate infrastructure for future power sector development.

1.2.5. The GoB received from the Asian Development Bank financial assistance to be used for strengthening the transmission system in the country, especially the 230kV & 132kV transmission facilities. ADB will provide a loan, while the remaining costs will be financed from POWER GRID funds.

1.2.6. Scope of Supply, delivery, and construction of transmission line(s) are mentioned in the specification and in Annex 1-1.

1.2.7. The various items of work are described very briefly in the relevant price schedules. The various items of the Schedule of Prices shall be read in conjunction with the corresponding sections in the Technical Specifications including amendments and, additions, if any. The Bidder's quoted rates shall be based on the description of activities in the Schedule of Prices as well as other necessary operations required to complete the works detailed in these Technical Specifications.

1.2.8. The unit rates quoted shall include minor details which are obviously and fairly intended, and which may not have been included in these documents but are essential for the satisfactory completion of the various works.

1.2.9. The unit rate quoted shall be inclusive of all plant equipment, men, material skilled and unskilled labour etc. essential for satisfactory completion of various works.

1.2.10. All measurements for payment shall be in S.I. units, lengths shall be measured in meters corrected to two decimal places. Areas shall be computed in square meters & volume in cubic meters rounded off to two decimals.

1.2.11. Bidder shall quote the unit rates for various items of towers as per units mentioned in appropriate Price Schedule. However, payment of these items identified in the price schedules shall be made as follows:

- Towers :
  - Supply items On supply of respective complete tower
  - Erection items On supply of respective complete tower
  - Foundation items: On completion of the respective foundation in all respects

1.2.12. All the raw materials such as steel, zinc for galvanizing, reinforcement steel, cement, coarse and fine aggregates for tower foundation, coke and salt for tower earthing etc. are included in the Con- tractor's scope of supply.

1.2.13. Bidders shall also indicate in the offer, the sources from where they propose to procure the fasteners, anti-theft fasteners, step bolts, hangers, D-shackles etc., tower accessories, aviation signal (if required) etc.

1.2.14. The entire stringing of conductors and earthwire shall be carried out by tension stringing technique. The Bidder shall indicate in their offer, the sets of tension stringing equipment he is having in his possession and the sets of stringing equipment he would deploy exclusively for each package, which under no circumstance shall be less than the number and capacity requirement indicated in Qualifying Requirements for Bidder.

1.2.15. In hilly terrain and thick forest or area with site constraints, where deployment of tension stringing machine is not possible, manual stringing may be adopted after getting approval of Employ- er's site Engineer. The Contractor shall deploy appropriate tools/ equipment / machinery to ensure that the stringing operation is carried out without causing damage to conductor / earthwire/OPGW and conductor / earthwire / OPGW is installed at the prescribed sag-tension as per the approved stringing charts.

1.3 Details of Transmission Line Routes and Terrain

1.3.1 The detailed survey shall be carried out using Total stations, DGPS, etc. along the approved route alignment. As an alternative, the Contractor may also use ALTM (Airborne Laser Terrain Modelling) techniques of equal or better accuracy for the detailed survey.

1.3.2 Bidders may, however, visit the line route to acquaint themselves with terrain conditions, approach /accessibility to the site, salient features of the route and associated details of the proposed transmission lines. Employer may also arrange joint site visit of line route in Bangladesh for all the interested Bidders who intend to participate in the bidding and have purchased the biding documents.

1.4 Location Details and Terminal Points

Please refer to **Annex 1-2** for terminal points.

The Contractor shall have to construct these transmission line(s) completely up to dead end towers on either ends. Stringing shall also be carried out from dead end tower to terminal gantry / tower.

1.5 Estimated and Final Quantities

The quantities set out in the schedules are, unless otherwise defined, estimated quantities of the Works required. They are not to be assumed as the actual and final quantities to be executed by the Contractor in fulfilment of his obligations under the contract.

Manufacturing and delivery quantities are to be established by the Contractor, and agreed upon by the Employer, within three (3) months from the date of signing of the Contract.

1.6 Modifications

The transmission line shall be completely in accordance with the Specification and associated design and general arrangement/outline drawings. Any modifications thereto are subject to written confirmation by the Employer/Engineer.

1.7 Terminal Points

The terminal points for the supply and/or installation of the transmission line are defined in **Annex 1-2.**

1.8 Programme of Work

a. Within 4(four) weeks of signing of the contract the Contractor shall submit to the Employer for approval, 5(five) copies of a bar chart detailing the plant manufacture, testing, delivery and erection programme (as appropriate) for the complete Contract Works.

b. The bar chart shall indicate the various phases of work for all appropriate items of the Contract, from commencement of the Contract to its final completion e.g. design, survey, approval of drawings, ordering of materials, manufacture, testing, delivery, erection and commissioning. The bar chart shall, when appropriate, allow the requisite periods of approval by the Employer, and/or any other regulatory body.

c. If at any time during the execution of the contract it is found necessary to modify the approved bar chart, the Contractor shall inform the Employer and submit a modified bar chart for approval. Such approval is not deemed to be consent to any amendments to the contractual completion date(s).

d. Modifications that may affect site work and associated local arrangements must provide a sufficient notice period to allow for any necessary re-arrangements. It should be recognised that where certain power line outages for crossing purposes have been specified, it may not be possible for these to be replanted due to system operational constraints and this should be allowed for in the overall programme.

e. The Employer intends that access will be given to a reasonable number of sites to provide continuity of work. However, the Contractor shall accommodate reasonable delays in access to some individual sites that may prevent sequential foundation installation and support erection work being carried out. Provided he has overall continuity of work, this shall not affect the Contractor's programme.

1.9 Safety Measures

The Contract Price shall include the cost for all necessary safety and health procedures to be taken by Contractor and Sub-Contractors under the Project, including following safety measures (not limited to):

- The Contractor shall submit to the Project Manager the work program including concrete safety plans to be done by Contractor (and Sub-Contractors) for protection of general public from accidents and for prevention of traffic accident in the project sites.
- “Health & Safety (Accident Prevention) Officer” shall be continuously stationed in the project construction site throughout the construction period.
- In case power shutdown of existing facility of POWER GRID/PDB/REB is required for Contractor’s works, the Contractor shall submit a safety and work plan and request the power outage at an appropriate time, subject to approval of the Project Manager.
- The Contractor shall immediately notify to the Project Manager in case any fatal, major or other accident, which may involve serious injuries, occurs during the period throughout implementation of Project.

1.10 Coordination and Cooperation with other Contracts

a. The Contractor shall cooperate with the Employer and other contractors to ensure the satisfactory completion of the Project.
b. The Contractor shall be responsible for design on the Plant interfacing with any items of equipment which will be installed by other contractor(s), when needed.
c. The Project Manager may call a coordination meeting(s) with other contractors. The Contractor shall dispatch qualified engineer(s) and settle all design parameters, interface conditions and other matters by these coordination meetings. The necessary expenses such as round-trip international air ticket, accommodation, inland travel charge, etc shall be borne by the Contractor, and such a cost shall be deemed to be included in the Contract Price.

1.11 Inspection

Please refer to Clause no 18.1.11 of section 18 of Technical Specification of Bidding Document.

Annex 1-1: Scope and Extent of Definite Works

Scope:

Design, Supply, Installation, Testing and Commissioning of LILO of Cumilla(N) – Shahjibazar (Power Plant) 230kV double circuit transmission line at Madhabpur, LILO of Sripur – Ashuganj 230kV double circuit transmission line at Monohardi and Monohardi-Bajitpur 132kV double circuit transmission line.

1. The following transmission lines will be constructed under the above contract:

   (i) LILO of Cumilla(N) – Shahjibazar PP 230kV double circuit transmission line at Madhabpur 230/132/33kV (Approx. 1 km) using Twin ACSR Mallard Conductor per phase and two 7x4.00mm GSW Earthwire equiv. OPGW . One four circuit line will be constructed.

   (ii) LILO of Sripur – Ashuganj 230kV double circuit transmission line at Monohardi 230/132/33kV (Approx. 5.5 km) using Twin ACSR Mallard Conductor per phase and two 7x4.00mm GSW Earthwire equiv. OPGW. One four circuit line will be constructed.

   (iii) Monohardi-Bajitpur 132kV double circuit transmission line. (Approx. 19 km) using Single ACSR Grosbeak Conductor per phase and one 7x3.25 mm GSW Earthwire equiv. OPGW.
   Approx. 1km at each end of the line (total approx. 2km) shall be built on four circuit towers with two circuits stringing to facilitate future line entry in the respective substations to minimize the right of way. One 7x3.25 mm GSW Earthwire equiv. OPGW and one 7x3.25mm GSW Earthwire shall be on the line.

2. The specification covers **following scope of works**:

a. The IEE (specifically the Environmental Management Plan) shall be followed by the contractor during the contract period to comply with environmental safeguards including social issues, Health & Safety. The contractor shall prepare & submit reports (e.g. Construction Environmental and Social Management Plan, Baseline Environmental Monitoring Report, Quarterly Environmental Monitoring Reports) according to the IEE (Environmental Management Plan) in due time after awarding the contract. The baseline environmental monitoring report and quarterly monitoring reports shall include laboratory (Govt. accredited/internationally recognized) based environmental parameters test reports by following Environmental Conservation Rules 2023 and IEE. A tree plantation plan shall be prepared by the contractor for undertaking 1:3 compensatory plantation with the timeline for completion prior to commissioning of substations and transmission lines. For tree plantation, Quarterly Monitoring Report must be submitted up to the defect liability period. Monitoring and Reporting must be done for 2 years for tree plantation management status and viability assessment by the Contractor after the completion of the work.

b. Detailed survey including route alignment, profiling, tower/Pole spotting, optimization of tower/Pole locations, soil resistivity measurement & geotechnical investigation (including special foundation locations, viz. pile/well foundation locations, if any).

c. Check survey shall be conducted to locate tower/Pole locations on ground conforming to the approved profile and tower/Pole schedule.

d. Fabrication, testing and supply of all types of transmission line towers including stubs, fasteners, anti-theft fasteners, step bolts, hangers, D-shackles, number plate, danger plate, tower earthing etc.

POWER GRID's existing designed towers shall be used. The Employer shall provide structural/erection drawings, available shop drawings and available bill of materials of all types of transmission line towers and their extensions as required to the Contractor after placement of award, in sequence, suiting the project requirement upon written request of the Contractor. However, if the Contractor needs to prepare any additional structural and shop drawings or make any correction of existing drawings, these have to be prepared by the Contractor without any additional cost. In such case, the Contractor has to submit relevant documents/drawings for approval of the Employer.

Bidders are requested to inspect the available drawings in the Design Dept. of POWER GRID to satisfy them regarding the extent of available drawings. Bidders are required to propose the tower materials from a manufacturer who will use the same material standard as mentioned in the tower drawings.

e. Fabrication, testing and supply of all types of tower accessories such as phase plates, circuit plates wherever applicable), number plates, danger plates, anti-climbing devices, bird guards, ladders (wherever applicable), resting platforms (wherever applicable), etc.

f. Design, manufacture, testing and supply of conductors, insulators, OPGW, hardware fittings and conductor & OPGW accessories.

g. Design of foundations for different types of towers, testing of foundations and casting of foundations (including special foundation locations, viz. pile/well foundation locations, if any) for tower footings;

h. Erection of towers, tower earthing, fixing of insulator strings, stringing of conductors, OPGW along with all necessary line accessories,

i. Painting of towers & supply and erection of span markers, obstruction lights (wherever applicable) for aviation requirements (as required);

j. Stringing of conductors and earthwires. The entire stringing of conductors and earth wire shall be carried out by tension stringing technique. The Bidder shall indicate in their offer, the sets of tension stringing equipment he is having in his possession and the sets of stringing equipment he would deploy exclusively for the Contract execution, which under no circumstance shall be less than the number and capacity requirement indicated in Qualifying Requirements for Bidder.

k. Testing & commissioning of the erected transmission lines and

l. Other items not specifically mentioned in this Specification and / or Schedule of prices but are required for the successful commissioning of the transmission line, unless specifically excluded in the Specification.

m. River Crossing

No mid span joint will be allowed in river crossing portion i.e. Anchor tower to Anchor tower. Hence, the length of conductor shall be fixed by the Contractor carefully to minimize the wastage.

The Contractor is required to arrange any additional special arrangement/work which may require to complete the above works within the specified Completion Time but not expressly mentioned in the specification. The Contractor has to assess such scope and complete the works within the specified Completion Time within the Contract Price.

n. Major Contract Components:

i. **Tower**: 230kV & 132kV double circuit and Four Circuit vertical formation lattice steel tower.

ii. **Conductor:** Twin ACSR Mallard Conductor per phase for LILO of Cumilla(N) – Shahjibazar PP 230kV double circuit transmission line at Madhabpur 230/132/33kV & LILO of Sripur – Ashuganj 230kV double circuit transmission line at Monohardi 230/132/33kV and Single ACSR Grosbeak Conductor per phase for Monohardi-Bajitpur 132kV double circuit transmission line.

iii. **Earthwire:** Two 7x4.00mm GSW Earthwire equiv. OPGW for LILO of Cumilla(N) – Shahjibazar PP 230kV double circuit transmission line at Madhabpur 230/132/33kV & LILO of Sripur – Ashuganj 230kV double circuit transmission line at Monohardi 230/132/33kV and one 7x3.25 mm GSW Earthwire equiv. OPGW (One OPGW and one earthwire on the line for four circuit portion) for Monohardi-Bajitpur 132kV double circuit transmission line.

iv. Insulators & Hardware fittings

The scope of works have been described briefly in this section which may not covered all the works to be done under this Contract. Bidders are requested to go through carefully the complete bidding document to understand the detailed scope of works.

It may be mentioned here that, if the contract consists of multiple section/part/line then, in case of non-availability of a particular tower/item for a line section, the Contractor will be allowed to use that particular tower/item from another section without any change in the quoted rate.

Annex 1-2: Terminal Points

LILO of Cumilla(N) – Shahjibazar PP 230kV double circuit transmission line at Madhabpur, LILO of Sripur – Ashuganj 230kV double circuit transmission line at Monohardi and Monohardi-Bajitpur 132kV double circuit transmission line.

Phase conductor and Earthwire shall be terminated at the gantry structures of the substations.

OPGW termination boxes shall be installed at the base of the substations gantry structures.

A jumper of sufficient length shall be provided with the slack span to be terminated at the substation entry equipment.

The termination work of the jumper to the substation equipment is not scope of this contract.

TECHNICAL SPECIFICATIONS

2. Site Particulars

2.1 General

The location of the transmission line(s) and associated climatic conditions described in the following clauses are given for guidance only.

2.2 Location

For details of the location of the transmission line(s) reference should be made to associated drawings included with the specification.

2.3 Climatic Conditions

For details of the climatic conditions associated with the site, please refer to **Annex 2-1**. The Contractor is advised to make a thorough study of local climatological records, since no delays to the completion date due to adverse weather conditions shall be accepted.

Annex 2-1: Climatic Conditions

The climatic conditions associated with the site are summarised below. However, the Contractor is advised to make a thorough study of local climatological records, since no delays to the completion dates due to adverse weather conditions shall be accepted.

All plant and equipment supplied under the contract shall be entirely suitable for the climatic conditions prevailing at site.

The project area and vicinity is close to sea level and is in a tropical climate. The ambient shade temperature variation is between 4 °C and 45 °C with periods of high humidity.

Between May and November, low-lying areas are subject to flooding. Flooding countermeasure shall be taken for the civil design, so as not to affect any equipment or works during the wet season. As per the recorded past maximum flood water levels in the project area, sufficient ground level height for land formation is required at the Contractor's responsibility. On certain sites, the flooding can be taken as an advantage in that the heavy loads may be floated on barges to close proximity of the sites.

The project area is a designated zone of moderate earthquake intensity. The seismic factor is 0.1 g.

Atmospheric pollution is moderate and no special insulator design or washing is required. The area is subject to high winds of typhoon strength.

Description	Unit	Required
Maximum ambient shade temperature	°C	45
Minimum ambient shade temperature	°C	4
Maximum daily average temperature	°C	35
Every Day Temperature for design (EDT)	°C	30
Maximum annual average temperature	°C	25
Maximum wind velocity for line design purposes	m/s	As per tower section
Minimum wind velocity for line rating purposes	km/h	3.2
Solar radiation	W/m²	1000
Rainfall	mm/year	2500
Relative humidity, maximum	%	100
Relative humidity, average	%	80
Altitude	m	< 1000
Atmospheric pollution	-	medium
Icing		no ice or snow expected
Seismic factor	g	0.1
Soil type	-	alluvial
Soil temperature (at 1.1 m)	°C	30 °C at 1.1 meter depth
Soil thermal resistivity	°Cm/W	1.5
Isokeraunic level (thunderstorm days/year)	days/year	80

The information in this clause is given solely for the general assistance of Bidders and no responsibility for it will be accepted nor will any claim based on this clause be considered.

3. Quality Assurance

3.1 General

3.1.1 The quality assurance arrangements shall conform to the appropriate sections of BS EN ISO 9001.

3.1.2 The Contractor's / Supplier's quality programme for the works shall define the systems and procedures adopted to ensure compliance with the contract requirements. These systems shall include the following:

Hold Point: "A stage in the implementation of project works including material procurement or fabrication/workmanship process beyond which work shall not proceed without the documented approval of the Engineer or their appointed representatives".

Notification Point: "A stage in the implementation of project works including material procurement or fabrication/workmanship process for which advance notice of the activity is required to permit attendance".

3.1.3 The Contractor/Supplier is required to give the Engineer or their appointed representatives the requisite period of notice of any notification point for which attendance is required.

3.2 Quality Assurance Program

3.2.1 The quality assurance programme shall give a description of the quality system for the works and shall include the following details:

a. The structure of the Contractor's/Supplier's organization
b. The duties and responsibilities of staff assigned to ensure quality of the work
c. The system for purchasing, taking delivery and verification of materials
d. The system for ensuring quality of workmanship
e. The system for control of documentation
f. The system for retention of records
g. The arrangements for the Contractor's/Suppliers auditing
h. A list of the administrative and work procedures required to achieve and verify the contract's Quality requirements. These procedures shall be made readily available to the Engineer for inspection on request.

3.2.2 The quality assurance programme for the works shall be submitted to the Engineer for approval within 30 (thirty) days of signing of contract; unless the Contractor's/Supplier's quality system has been previously audited and approved by the Engineer on behalf of the Employer/Purchaser. **This is a Hold Point.**

3.3 Quality Plan

A specific quality plan for each section of the work shall be produced by the Contractor and/or Supplier. Each quality plan shall set out the activities in a logical sequence and shall take into account the following:

a. An outline of the proposed work and programme sequence
b. The structure of the Contractor's and/or Supplier's organisation for the contract
c. The duties and responsibilities of staff assigned to ensure quality of work for the contract
d. Hold and notification points
e. Submission of Engineering documents required by this specification
f. The inspection of materials and components on receipt
g. Reference to the Contractor's and/or Supplier's quality assurance procedures appropriate to each activity
h. Inspection during fabrication/construction
i. Final inspection and tests.

The Contractor's and/or Supplier's quality plan shall be submitted to the Engineer for approval within 30 (thirty) days of signing of contract. **This is a Hold Point.**

Notification and hold points are given in **Annex 3-1**.

3.4 Equivalent Standards

3.4.1 The IEC and BSI standards, together with other references referred to in this specification are listed in **Annex 3-2**. It is the Contractor's / Supplier's responsibility to ensure they are in possession of the latest edition, including all amendments current on the defined date prior to the bid closing date.

3.4.2 Materials or equipment conforming to alternative international or national standards will be considered by the Engineer, provided that these standards ensure an equivalent or higher quality.

3.4.3 The Contractor/Supplier shall bring to the attention of the Engineer any inconsistencies between the requirements of these Standards and this specification.

3.4.4 Where equivalent standard(s) are offered as an alternative, the Contractor/Supplier shall provide two copies of English language translations of the standard(s) at no extra cost to the contract.

3.5 Quality Control

3.5.1 Inspection and Testing

The prime responsibility for inspection and testing rests with Contractor/Supplier. The inspection and acceptance of drawings, materials and workmanship; or the waiver of inspection by the Engineer does not relieve the Contractor/Supplier of any obligations or responsibilities to carry out the work in accordance with the contract. The inspection and testing shall be documented in such a way that it is

possible to verify that it was undertaken. Records of inspection shall include as a minimum the contract identity, the name of inspector/tester, date of inspection/test, operation/inspection, technique used, acceptance standards, criteria and acceptability.

3.5.2 Type, Sample and Routine Tests

Type, sample and routine tests shall be undertaken as appropriate on all components supplied and/or installed under this contract, in accordance with the requirements of this specification.

3.5.3 Certificate of Conformity

Prior to the issue of the "Release Certificate" or agreement to shipping, the Contractor/Supplier shall submit to the Engineer 3 (three) copies of the completed certificate of conformity (see **Annex 3-3**). The certificate shall be supported by copies of the appropriate material test certificates, inspection records, type and sample test reports as detailed in the relevant section of this specification.

The documents to be submitted by the Contractor are listed in **Annex 3-4**.

3.6 Non-Conforming Products

The Engineer shall review the non-conforming products in accordance with BS EN ISO 9001.

3.7 Monitoring of Quality Assurance Arrangements

Monitoring of quality assurance arrangements may be undertaken by the Engineer/Employer during the course of the contract. This will take the form of surveillance of the activities at work locations and/or by formal audits of the Contractor's/Suppliers systems and procedures that constitute his quality assurance arrangements. Corrective actions shall be agreed and implemented in respect of any deficiencies.

The Contractor/Supplier (including his suppliers or Subcontractors) shall provide all facilities including access, which may be required by the Engineer/Employer for monitoring activities.

3.8 Suppliers and Subcontractors

The Contractor/Supplier shall ensure that any suppliers or Subcontractors appointed by him under the contract shall conform to the requirements of this specification. Prior to the appointment of any Supplier/Subcontractor the Contractor/Supplier shall ensure that their quality assurance arrangements comply with the requirements of BS EN ISO 9001 and this specification.

The Contractor's auditing of his Supplier's/Subcontractor's quality assurance arrangements shall be documented to demonstrate to the Engineer their extent and effectiveness.

3.9 Method Statements

Prior to commencing any section of the work, the Contractor shall submit method statements in accordance with the requirement of the relevant section of this specification. Submission of these method statements shall be treated as **Hold Points**.

When requested by the Engineer or their appointed representatives, additional method statements related to specific items of work shall be provided by the Contractor.

Annex 3-1: Notification and Hold Points

Clause Reference	Document Description	Comment
3.2		Quality Assurance Programme
3.3		Quality Plan

Annex 3-2: Reference Standards

The reference standards and other documents referred to in this chapter of the specification are listed below:

BS EN ISO 9001 - Model for quality assurance in design, development, production, installation and servicing.

Annex 3-3: Certificate of Conformity

Certificate of Conformity

To: Project Director
Power Grid Company of Bangladesh Ltd.
IEB Bhaban
Ramna, Dhaka-1000, Bangladesh

From: (Contractor's Details)

Contract: _____

We certify that the products detailed below have been inspected, tested and unless noted to the contrary, conforming all respects to the requirements.

Quantity	Description	Attachments	Please tick
		Test reports (details) Other (as per relevant sections)	☐ ☐
		Test reports (details) Other (as per relevant sections)	☐ ☐
		Test reports (details) Other (as per relevant sections)	☐ ☐

Date and signature: _____

Annex 3-4: Engineering Documents to be submitted by the Contractor

Clause Reference	Documents Description	Comment
3.2	Quality Assurance Programme	
3.3	Quality Plan	
3.4	Equivalent standards	if applicable

Annex 3-5: Field Quality Plan for Transmission Lines

Standard Field Quality Plan for Transmission Lines - Document No. POWER GRID/FQP/TL/001, Rev. 00

No.	Description of Activity	Items to be Checked	Tests / Checks to be done	Ref. Documents	Check/Testing		Counter Check / Test by Employer	Accepting Authority in Employer
					Agency	Extent		
1.	**Detailed Survey**	a. Route alignment	Optimization of route length	a. Preliminary survey b. Topographical map c. Tower spotting data given by Engineer	Contractor	100% at Field	100% based on record documents	Project in charge
		b. Route profiling & tower spotting.	1. Ground clearance 2. Wt. span 3. Sum of adj. span (wind span) 4. Angle of deviation	a. Sag template b. Tower spotting data c. Route alignment	Contractor	100% at Field	100% based on record documents	Line in charge
2.	**Check Survey**	Tower location & final length	1. Alignment 2. Final length	a. Route alignment b. Tower schedule c. Profile	Contractor -do-	100% at Field -do-	i) All angle towers in plains and 50% in hilly terrains. ii) Final length to be checked on 100% basis based on records /documents	Section In charge
3.	**Detailed Soil Investigation**	a. Bore log	1. Depth of bore log 2. SPT 3. Collection of samples	As per Employer's Specification	Contractor	100% at Field	To witness 40% at field	Section in charge
		b. Tests on samples	As per tech. Specs.	As per Employer's Specification	Lab approved by Employer	100% by testing lab	Review of lab test results	Line in charge based on the report review by site engineer.

No.	Description of Activity	Items to be Checked	Tests / Checks to be done	Ref. Documents	Check/Testing		Counter Check / Test by Employer	Accepting Authority in Employer
					Agency	Extent		
4.	**Tower Foundation**	**A. Materials** 1. Cement	1. Source approval	Source meeting Employer's Specification /approve d vendor	Contractor	As proposed by Contractor	To verify the proposal based on the supply made and factory test results.	Line in charge
			2. Physical tests	As per Annex 3-6	Samples to be taken jointly with Employer and tested at Employer approved lab	Review of all MTC's and one sample for every 500 MT	100% review of lab test results	Line in charge
			3. Chemical Tests Chemical composition of Cement	-do-	Contractor to submit MTC	100% review of MTC by Contractor	100% review of MTC	Line in charge
		2. Reinforcement Steel	1. Source approval	To be procured from main producers only.	Contractor	As proposed by Contractor	To review the proposal based on the documents.	Line in charge.
			2. Physical and chemical analysis test	As per Annex 3-6	Contractor to submit MTC	All MTCs	100% review of MTC	Line in charge
		3. Coarse Aggregates	1. Source approval	Source meeting Employer Specification	Contractor	Proposed by the Contractor, indicating the location of the quarry and based on the test results of Joint samples tested in Employer approved lab	To review the proposal based on the documents	Line in charge
			2. Physical tests	As per Annex 3-6	Samples to be taken jointly and tested in Employer-approved lab	One sample per lot of 200 cum or part thereof	100% review of lab test results	Line in charge

No.	Description of Activity	Items to be Checked	Tests / Checks to be done	Ref. Documents	Check/Testing		Counter Check / Test by Employer	Accepting Authority in Employer
					Agency	Extent		
		4. Fine aggregate	1. Source approval	Source meeting Employer Specification	Contractor	Proposed by the Contractor, indicating the location of the quarry and based on the results of Joint samples tested in Employer approved lab.	To review the proposal based on the documents.	Line in charge
			2. Physical test	As per Annex 3-6	Samples to be taken jointly and tested in Employer approved lab	One sample per lot of 200 cum or part thereof	100% review of lab test results	Line in charge
		5. Water	1.Cleanness (Water shall be fresh and clean)	Employer's Specification	Contractor	100% visual check at Field	Verification at random	Site Engineer
			2. Suitability of water for concreting	Employer's Specification	Contractor	100%Visual Check at Field	Verification at random	Site Engineer
		B. Classification	1. Visual observation of soilstrata 2. Groundwater level 3. History of water table in adj. area/surface water 4. Soil Investigation wherever required	Employer's Specification	Contractor	100% at Field	100% at Field	a. Section in charge b. In case of WBC/SFR /FS acceptance by line in charge c. For Spl. foundations /pile foundations acceptance by Project Engineer in charge

No.	Description of Activity	Items to be Checked	Tests / Checks to be done	Ref. Documents	Check/Testing		Counter Check / Test by Employer	Accepting Authority in Employer
					Agency	Extent		
		C. Concrete Works a. Before concreting						
		1. Bottom of excavated earth	Depth of foundation	Approved drawings	Contractor	100% at field	100% check by Employer	Site Engineer
		2. Stub setting	1) Centre Line 2) Diagonals 3) Level of stubs	-do-	-do-	-do-	-do-	-do-
		3. Reinforce-ment steel	Placement	Bar bending schedule	-do-	-do-	-do-	-do-
		b. During concreting						
		1. Workability	Slump test	Range 50 mm to100 mm refer document at Annex 3-6(5)	Contractor	100% at field	40% check at random	Site Engineer
		2. Concrete strength	Cubes comp strength	PWD SPEC as referred in document at Annex 3-6(5)	Casting of cubes at site. Cubes to be tested at Employer-approved lab for 28days strength	One sample of 4 cubes in each tower locations or per 6 cum concreting per day work.	100% review of lab test results.Cubesat40% location are to be taken in presence of Employer's officials	Section in charge
5.	**Pile foundations**	1. All materials like cement, steel, coarse / fine aggregate, water	To be tested as per procedure enumerated in the respective columns above					
		2. Before concreting	1. Check for centre line of each pile	Approved Drawings	Contractor	100%	100%	Site Engr.
			2. Check for diameter /verticality	-do-	-do-	-do-	-do-	-do-

No.	Description of Activity	Items to be Checked	Tests / Checks to be done	Ref. Documents	Check/Testing		Counter Check / Test by Employer	Accepting Authority in Employer
					Agency	Extent		
			of each pile					
			3. Check for depth of each pile	-do-	-do-	-do-	-do-	-do-
		3. During concreting						
		a. Workability	1. Slump test	150-200mm as per Employer's Specif.	Contractor	For each leg	100% at field	Site ENGINEER
		b. Concrete strength	2. Cubes compressive strength	As per Employer's specifications	Contractor. One set of cubes (min. 4 pieces) to be taken and tested for 7 & 28 days strength at Employer-app-roved laboratory	For pile one set for each leg. For pile caps, beams, chimney, one sample for every 6 m³ or part thereof for each day of concreting.	100% cubes for piles, 20% pile caps, beams, chimney etc. to be taken in presence of Employer's officials. 100% review of test results.	Section in charge.
6.	**Tower Erection**	1. Materials a. Tower member / bolts & nuts / washers / accessories	Visual checking for 1. Stacking 2. Cleanliness 3. Galvanizing 4. Damages	Approved drawings /BOM	Contractor	100% at stores	100% verification of records	Site Engineer
		2. Erection of super-structure	1. Sequence of erection	As per approved drawings /Employer's specifications	Contractor	100% at field	100% check	Site Engineer
			2. Check for completeness	-do-	-do-	-do-	-do-	-do-
			3. Tightening of nuts and bolts	-do-	-do-	-do-	-do-	-do-
			4. Check for verticality	-do-	-do-	-do-	-do-	-do-
			5. Tack welding for bolts & nuts	Employer's Specifications	Contractor	100%at field	100%check	Site Engineer

No.	Description of Activity	Items to be Checked	Tests / Checks to be done	Ref. Documents	Check/Testing		Counter Check / Test by Employer	Accepting Authority in Employer
					Agency	Extent		
		3. Tower footing resistance(TFR)	TFR at locations before and after earthing.	Employer's Specifications	Contractor	100%at field	20%locationstobe verified	Line in charge
7.	**Stringing**	1. Materials						
		a. Insulators	1. Visual check for cleanliness/glazing/ cracks/white spots.	Employer's Specifications	Contractor	100% at Field	100% verification of records and to carry random checks 10%	Site Engineer
			2. IR Value	(min. 50MOhms)	-do-	One test per sample size of 20 for every lot of 10,000	To verify Contractor's records 100% and joint check 20% of total tests	-do-
			3. E&M test	-	Insulator supplier	a. 20 per 10,000 for discs b. 3 per 1500 for long rod	Collection of samples, sealing them and handing over by Employer to insulator supplier	Tests to be witnessed / Approved by QA & I at Manufacturer's works
			4. Traceability (make/batch no./locations where installed)	Packing list/CIP	Contractor	100% at field	100% Review of records	Site Engineer
		b. Conductor	On receipt, 1. Visual check of drum.	Packing list	Contractor	100% at stores	20% check	Site Engineer
			2. Check for seals at both ends, and Employer's sticker on outer end	-do-	-do-	-do-	-do-	-do-
			3. Check depth from top of flange to the top of the outer most layer	-do-	-do-	-do-	-do-	-do-
		c. Earthwire	Check for seals at	Packing list	Contractor	100% at stores	20% check	-do-

No.	Description of Activity	Items to be Checked	Tests / Checks to be done	Ref. Documents	Check/Testing		Counter Check / Test by Employer	Accepting Authority in Employer
					Agency	Extent		
			both ends					
		2. Field activity						
		a. Before stringing	Readiness for stringing	Stringing procedures as per approved specifications	Contractor	Readiness certificate to be submitted by the Contractor	Review of Certificate	Line in charge
		b. During stringing	(Conductor / earthwire)					
			1. Scratch/cut check (visual)	Approved drawings/ Employer's specifications	Contractor	100% at Field	100% record & field check 20%	Site Engineer
			2. Repair sleeve	-do-	-do-	-do-	-do-	-do-
			3. Mid span Joints	-do-	-do-	-do-	-do-	-do-
			4. Guying (in case of towers not designed for one side stringing)	Approved guying arrangement / Employer's specifications	-do-	-do-	100%	Section in charge
		c. After stringing	Check for					
			1. Sag/Tension	Sag tension chart/tower spotting data	-do-	-do-	100% record & field check 20%	Site Engineer
			2. Electrical clearances	As per approved drawings / Employer's specifications	-do-	-do-	-do-	-do-
			i) Ground clearance	-do-	-do-	-do-	-do-	-do-
			ii) Live metal clearance etc.	-do-	-do-	-do-	-do-	-do-
			3. Jumpering	-do-	-do-	-do-	-do-	-do-
			4. Placement of spacer/damper	As per specification / drawings / placement	-do-	-do-	-do-	-do-

No.	Description of Activity	Items to be Checked	Tests / Checks to be done	Ref. Documents	Check/Testing		Counter Check / Test by Employer	Accepting Authority in Employer
					Agency	Extent		
				chart				
8.	**Final Testing**							
	a. Pre-commissioning of lines	a. Readiness of lines for pre-commissioning	1. Completeness of line. 2. Meggar test of line	As per approved drawings / Employer's latest pre-commissioning procedures	Contractor	100%	100% joint checking	Project in charge
	b. Commis-sioning of line	Readiness of lines for commissioning	2. Digital photograph of each tower to ascertain the completeness of tower.	a. Employer's latest pre-commissioning procedures b. Pre-commissioning report c. CEA clearance	-do-	-do-	-do-	-do-
			3. Electrical Inspectors clearance from CEA		-do-	-do-	-do-	-do-

Annex 3-6: Acceptance Criteria and Permissible Limits

Annex 3-6(1): Acceptance Criteria and Permissible Limits for Cement

1. Mechanical and physical requirements given as characteristic values

Strength Class*	Early Strength		Standard Strength	Initial Setting Time (min.)	Soundness (mm)
	2days	7days	28days		
32.5N	-	≥ 16.0	≥ 32.5	≥ 75.0	≤ 10.0
32.5R	≥ 10.0	-			
42.5N	≥ 10.0	-	≥ 42.5	≥ 60.0	
42.5R	≥ 20.0	-			
52.5N	≥ 20.0	-	≥ 52.5	≥ 45.0	
52.5R	≥ 30.0	-			

2. Chemical requirements given as characteristic values

Property	Test Reference	Cement Type	Strength Class*	Requirements
Loss on ignition	EN 196-2	CEM I CEM III	All	≤5.0%
Insoluble residue	EN 196-2	CEM I CEM III	All	≤5.0%
Sulphate content (as SO_3)	EN 196-2	CEM I CEM II CEM IV CEM V	32.5N 32.5R 42.5N	≤3.5%
			42.5R 52.5N 52.5R	≤4.0%
		CEM III	All	
Chloride content	EN 196-21	All	All	≤0.1%
Pozzolanicity	EN 196-5	CEM IV	All	Satisfies the test

* A class with ordinary early strength, indicated by N and a class with high early strength indicated by R.

* The requirements are not limited to, those mentioned above. For details of the requirements shall be made to the BS EN 197-1.

Annex 3-6(2): Acceptance Criteria and Permissible Limits for Reinforcement Steel

No.	Name of the Test	Carbon Steel Bars as per BS 4449		Remarks
		Grade 250	Grade 460	
i)	Chemical analysis test			
	Carbon	0.25% max.	0.25% max.	
	Sulphur	0.06% max.	0.05% max.	
	Phosphorus	0.06% max.	0.05% max.	
ii)	Physical tests			
	Specified characteristic strength	250 N/mm³	460 N/mm³	Testing in approved lab
	Minimum elongation	22%	12%	Testing in approved lab
iii)	Bend & re-bend tests	Pass	Pass	Testing in approved lab

The requirements are not limited to those mentioned above. For details of the requirements, refer to BS4449.

Annex 3-6(3): Acceptance Criteria and Permissible Limits for Coarse Aggregate

3.	Coarse Aggregates - Physical Tests										
	a. Determination of particles size	a. Sieve Designation	Percentage passing for Single-Sized Aggregate of Nominal Size					Percentage Passing for Grades Aggregate of Nominal Size			
			40mm	20mm	16mm	12.5mm	10mm	40mm	20mm	16mm	12.5mm
		63mm	100	-	-	-	-	-	-	-	-
		40mm	85-100	100	-	-	-	95-100	100	-	-
		20mm	0-20	85-100	100	-	-	30-70	95-100	100	100
		16mm	-	-	85-100	100	-	-	-	90-100	-
		12.5mm	-	-	-	85-100	100	-	-	-	90-100
		10mm	0-5	0-20	0-30	0-45	85-100	10-35	25-35	30-70	40-85
		4.75mm	-	0-5	0-5	0-10	0-20	0-5	0-10	0-10	0-10
		2.36mm	-	-	-	-	0-5	-	-	-	-
	b. Flakiness index		Not to exceed 25%								
	c. Crushing value		Not to exceed 45%								
	d. Presence of deleterious material		Total presence of deleterious materials not to exceed 5%								
	e. Soundness test (for concrete work subject to frost action)		12% when tested with sodium sulphate and 18% when tested with magnesium sulphate								

Annex 3-6(4): Acceptance Criteria and Permissible Limits for Fine Aggregate

4	Fine aggregates - Physical Tests	Sieve Designation	Percentage Passing for Graded Aggregate of Nominal Size		
			F.A. Type I	F.A. Type II	F.A. Type III
	a) Determination of particle size	10 mm	100	100	100
		4.75 mm	90-100	90-100	90-100
		2.36 mm	60-95	75-100	85-100
		1.18 mm	30-70	55-90	75-100
		600 microns12.5 mm	15-34	35-59	60-79
		300 microns	5-20	8-30	12-40
		150 microns	0-10	0-10	0-10
	b) Silt content		Not to exceed 8%	Not to exceed 8%	Not to exceed 8%
	c) Presence of deleterious material	Total presence of deleterious materials shall not exceed 5%			
	d) Soundness Applicable to concrete work subject to frost action	12% when tested with sodium sulphate and 15% when tested with magnesium sulphate			

Annex 3-6(5): Acceptance Criteria and Permissible Limits for Concrete Work

1)	Concrete	a) Workability	Slump shall be recorded by slump cone method and it shall between 50-100 mm for pile cap and chimney, 150mm to 200mm for concrete pile.
		b) Compressive strength	For pile one set for each leg. For Pile caps, beams, Chimney, one set for every 6 Cu.m. or part thereof for each day of concreting. Each set consists of four cubes, one for 7 days testing and two for 28 days testing shall be taken.

Notes - Acceptance Criteria are based on 28 days compressive strengths for nominal mix concrete:

a. The average of the strength of three specimen be accepted as the compressive strength of the concrete, provided the strength of any individual cube shall neither be less than 70% nor higher than 130% of the specified strength.

b. If the actual average strength of accepted sample exceeds specified strength by more than 30%, the Engineer-in-charge, if he so desires, may further investigate the matter. However, if the strength of any individual cube exceeds more than 30% of the specified strength, it will be restricted to 30% only for computation of strength.

c. If the actual average strength of accepted sample is equal to or higher than specified up to 30%, the strength of the concrete shall be considered in order and the concrete shall be accepted at full rates.

d. If the actual average strength of accepted sample is less than specified strength but not less than 70% of the specified strength, the concrete may be accepted at reduced rate at the discretion of Engineer-in-charge.

e. If the actual average strength of accepted sample is less than 70% of specified strength, the Engineer-in-charge shall reject the defective portion of work represent by sample and nothing shall be paid for the rejected work. Remedial measures necessary to retain the structure shall take at the risk and cost of Contractor. If, however, the Engineer-in-charge so desires, he may order additional tests to be carried out to ascertain if the structure can be retained. All the charges in connection with these additional tests shall be borne by the Contractor.

General Notes:

- This standard Field Quality Plan is not to limit the supervisory checks that are otherwise required to be carried out during execution of work as per drawings/Technical specifications etc.

Contractor shall be responsible for implementing/documenting the quality plan. Documents shall be handed over by the Contractor to Employer after the completion of the work.

Project in charge means over all in charge of work. Line In charge means in charge of the line. Section in-charge means in charge of the section.

Acceptance criteria and permissible limits for tests are indicated in the Annexure. However for further details/tests Employer specification and relevant standards shall be referred.

Tests as mentioned in this FQP shall generally be followed. However Employer reserves the right to order additional tests wherever required necessary at the cost of the Contractor.

Annex 3-7: Approximate Positions of Towers

Approximate positions of the angle and terminal towers and the positions of such intermediate towers as it may have been desirable to determine during preliminary way leave negotiations are indicated on Reference data given in this specification.

The conceptual drawings for line elements are indicated in this specification.

4. Design Particulars

4.1 Philosophy of Design

4.1.1. The philosophy of design in this specification is based upon deterministic principles, whereby the applied loading multiplied by the appropriate safety factor must be less than the ultimate strength of the component.

4.1.2. In bidding the Contractor/Supplier will be deemed to have concurred, as an experienced Manufacturer, with the design and layout of the works as being sufficient to ensure reliability and safety in operation, freedom from undue stresses and satisfactory performance in all other essentials as a working plant.

4.1.3. The transmission line(s) shall be designed with high reliability and low cost maintenance as the primary consideration in accordance with the relevant sections of the Specification.

4.1.4. The design shall incorporate all reasonable precautions and provisions for the safety of those concerned in the erection and subsequent maintenance of the contract works.

4.2 Units of Measurement

In all correspondence, technical schedules, design calculations and drawings, the metric (SI) units of measurement shall be used. Angular measurement shall be degrees, with 90° comprising a right angle.

4.3 Document Submission

The Contractor/Supplier shall submit to the Engineer all design calculation drawings, method statements, test programmes, test records etc. as defined in the different chapters of the specifications, or as otherwise agreed by the Engineer. For details of the number of copies and time periods for approval, reference should be made to **Annex 4-1**.

4.4 Design Calculations

4.4.1 All sets of calculations shall be complete, bound, properly titled and given a unique drawing number (see clause 4.5.1). The binding shall be such as to allow the easy introduction of subsequent pages if necessary.

4.4.2 Bound into each set shall be a fully detailed index. Following this shall be a design information sheet(s) which shall incorporate the following details:

a. The design concept shall be summarised;
b. Full details of manuals, design papers or other aids referred to in the text shall be given, with photocopies of relevant sheets if appropriate;
c. Full loading shall be reiterated, with their derivation if appropriate;
d. Design stresses shall be reiterated;
e. Code or standard references should be quoted, and equations written out in full for initial calculations;

4.4.3 Should the Contractor/Supplier be required to re-submit amended calculation or additional sheet(s), the following annotation shall be adopted:

Amended sheets should retain the same sheet number, but have a lower case revision letter suffix i.e. sheet 14 when amended becomes 14a, then 14b.
Additional sheets that needed to be inserted shall be given the sheet number they are added to, plus an upper case letter prefix i.e. additional sheets to piece 60 become A60, B60 etc. and if subsequently amended A60a etc.

4.4.4 Where computer programs are used for design calculations, a full explanation in English language shall be provided to assist the Engineer's approval of the calculations for each and every program used. Details must include name of program, author, source, comprehensive description of theoretical basis including all references to relevant documentation, checks undertaken on program and a list of projects on which the program has been used.

4.5 Drawings

4.5.1 General Requirements

4.5.1.1. Drawings shall be to scale, fully detailed and all dimensions shall be in metric units. General arrangement drawings submitted shall be to a scale of not less than 1 to 50 and all detailed drawings not less than 1 to 20. Profile drawings shall normally be drawn to vertical scale of 1 to 200 and a horizontal scale of 1 to 2,000.

4.5.1.2. Drawings sheets shall conform in size to BS ISO 5457, mainly A0, A1, A2, A3 and A4. The sheet size is to be stated on the drawing within or adjacent to the title block. Drawings shall be to BS 308 or equivalent.

4.5.1.3. The scale used shall be stated on the drawing as a ratio together with a linear scale at a convenient position along the margin of the original drawing sheet.

4.5.1.4. The physical drafting requirements in respect of line density, strength, contrast, spacing and character liability shall be met to ensure drawings are suitable for copying.

4.5.1.5. All drawings shall bear English title, serial number of the main contract, drawing number unique to this contract and scale. The system of numbering and layout of the title block will be to the approval of the Employer. The title block shall include the name and address of the Employer. The revision notes shall detail the nature of each revision. The revision shall be enclosed in a cloud with the revision letter indicated.

4.5.2 Computer Generated Drawings/Designs

All drawings shall be prepared using AutoCAD software version 2007or later only. Drawings, which are not compatible to AutoCAD software version 2007 or later shall not be accepted. After final approval all the drawings (structural drawings, BOMs, shop sketches and tower accessories, hardware fittings, plan & profile, sag curve, etc. drawings) shall be submitted to the Employer on CDs.

In addition to the hardcopy of drawings/designs the contract is required to submit soft copy of all the drawings in AutoCAD format and all related documents in Microsoft Word/Excel format. For drawings /designs developed by PLS software, the soft copy of the input files and other related files are also required to be submitted during submission of hardcopy for approval.

4.5.3 Contract Drawing List

At defined intervals the Contractor/Supplier shall submit the required number of copies of the contract drawing list.

The list shall contain the following information:

a. Drawing number;
b. Drawing title;
c. Revision status;
d. Submission date.
e. Date of receipt of comments/approval.
f. Approval status.

All changes since the previous issue shall be clearly indicated and when agreed only the front (index) sheet and revised sheets need to be submitted.

4.5.4 Contract Record Drawings

The Contractor/Supplier shall submit to the Engineer:

a. A final issue of the contract drawing list indicating which of the drawings, design calculations, method statements etc. he proposes to issue as final contract drawings. These drawings shall be updated to incorporate all modifications made during erection and commissioning
b. Requisite number of prints of each schedule, including where appropriate the supply and installation material manual
c. Requisite number of drawings, including design calculations, schedules including the supply and Installation Material Manual on CD-ROM in WPG /DXF /PDF /DWG /DOC format. The tower drawings and plan & profile drawings shall be submitted in AutoCAD format.

The distribution of the contract record drawings will be advised by the Engineer.

4.5.5 Route Maps

4.5.5.1 During the progress of the work the Contractor shall record on profiles, tower and Installation Material Manual (SIMMs) and on a set of survey maps of approved scale such particulars as will allow an accurate reference to be made afterwards in case of any faults or projected modifications to the line.

4.5.5.2 The map and/or profile sheet shall show the exact position of every tower with approved reference marks. The maps shall be supplemented, or profiles marked by sketches where necessary, to delineate boundary positions of towers which cannot be clearly indicated on the maps.

4.5.5.3 The data included on the maps, profile, sketches and SIMMs shall be submitted to the Engineer, to whom facilities shall be given for examining such records during the progress of the work.

4.6 Sag Templates (not used)

4.7 Supply and Installation Material Manual (SIMM)

As soon as final support positions are selected and approved, the Contractor shall provide the requisite copies of the A4 size Supply and Installation Material Manual (SIMM).

Each tower position shall be represented by one sheet of the, manual with the following information recorded:

a. Provisional and final tower numbers;
b. Profile and Record Map reference drawing numbers;
c. Span;
d. Wind span;
e. Weight span;
f. Angle of deviation;
g. Tower type, leg and body extensions and general arrangement (G.A.) drawing reference numbers;
h. Foundation type and G.A. drawing reference number;
i. Earthing details and G.A. drawing reference number;
j. Insulator set details and G.A. drawing reference number;
k. Sag adjustment setting, and linkage requirements where appropriate;
l. Phase conductor jumper details including spacer and general arrangement drawing reference number where appropriate;
m. Earthwire set details and G.A. drawing reference number;
n. Earthwire vibration damper G.A. drawing reference number;
o. Aircraft navigation (obstruction aids) drawing reference number where appropriate;
p. Fibre optic junction boxes and cabling G.A. drawing reference number where appropriate;

In addition the following schedules shall be included:

Phase conductor and earthwire sags and tensions (erection and final);
Suspension insulator set off-sets;
Location and spacing of phase conductor spacers and spacer dampers (where appropriate);

Location of all phase conductor and earthwire tension and non-tension joints;
Location and spacing of all aircraft warning spheres (where appropriate);
Location of all fibre optic joint boxes - (where appropriate).

The appropriate reference drawing numbers shall also be included. Preliminary copies of SIMMs shall be available prior to any site work commencing, together with material summaries. **This is a Hold Point.**

4.8 Maintenance Manual

4.8.1 The Contractor/Supplier shall provide to the Engineer at the specified period before the end of the construction period of the contract, a maintenance manual covering the following information:

a. Type, code number and description of all plant erected, together with names and addresses of manufacturer;
b. Methods of assembly of all fittings;
c. Method of replacing any part of the plant including the use of maintenance holes provided on the support, access provisions and where appropriate the application of 'live-line' maintenance techniques;
d. Recommendations of preventive maintenance including frequency of inspections;
e. List of recommend maintenance equipment with a description of its use and limitations;
f. Type and application of temporary earthing equipment;
g. Personnel safety equipment requirements and any risk assessments required.

4.8.2 The above information must be as specified in this contract and entirely in the English language.

4.8.3 Drawings and diagrams shall be used where necessary to enable the proper maintenance of the whole works.

4.8.4 The manual shall be suitably bound within a hard cover, and all materials used shall be reasonably hard wearing.

4.8.5 The manual shall be submitted to the Engineer. **This is a Hold Point.**

4.9 Samples and Models

If the nature of the works makes it desirable, the Contractor/Supplier may be asked to submit or prepare for the Engineer such samples, patterns and models as the Engineer may reasonably require for the purpose of design approval at the expense of the Contractor/Supplier.

4.10 Photographs

The Contractor/Supplier shall make all arrangements to provide progress photographs of all tests and such sections of the work in progress as directed by the Employer. Each photograph shall be of size 25 cm x 20 cm suitably titled. The negatives and/or electronic files of the photographs shall be the

property of the Employer and no prints from these negatives and/or electronic files shall be supplied to any persons unless under the authority of the Employer.

The Contractor/Supplier will normally be required to provide every month at his own cost the 3 (three) sets of unmounted progress photographs suitably inscribed, on portions of the work - in progress, throughout the period of construction. Any variation to these quantities will only be with the permission of the Employer.

Annex 4-1: Time Intervals for Document Submission, Test and Inspection Notification, and Number of Submission Copies

Item	Time Interval (Weeks)	Notification Period (Days)	No. of Copies
Submission of:			
Contract drawing list	4	-	5
Maintenance Manual	26	-	10
Method statement:			
Overall	12	-	5
Detailed	4	-	5
Work Programme		-	5
Reports:			
Weekly reports	1	-	5
Monthly reports	4	-	5
Quality Assurance Programme	4	-	5
Quality Plan	4	-	5
Preliminary supply and installation material manual	12	-	5
Time intervals:			
Currency of standards	4	-	-
Drawing approval	3	-	-
Profile approval and commencement of site work	x	-	-
Commencement of work after issue of notice	1	-	-
Suspension of work	1	-	-
Notification periods:			
Prototype test of towers - type test			
overseas		28	
local		7	
Sample test - overseas		14	
Inspection of work on site		3	
Final line inspection		14	
Commencement of survey		7	
Stringing of conductor across roads, etc.		7	
Number of copies:			
Drawings for approval			5
Approved drawings			5
Test program incl. prototype test of towers			5
Final supply installation material manuals			5
Installation instructions			6
Contract records:			
Prints			1
CDs			5
Test reports			5

Item	Time Interval (Weeks)	Notification Period (Days)	No. of Copies
Certificate of conformity			1
English language translation of "equivalent" standards			1
Applicable reference standards	4		1

Note: The time interval refers to the appropriate time period in weeks required before or after a specified event e.g. the Contract Drawing List shall be submitted at 4 week intervals, while the Applicable Reference Standards shall be submitted 4 weeks after signing of the contract.

Annex 4-2: Engineering Documents to be submitted by Contractor

Clause Reference	Document Description	Comment
4.5.3	Contract Drawing List	
4.5.4	Contract Record List	
4.5.5	Route Maps	
4.7	Supply and Install Material Manual	
4.8	Maintenance Manual	
4.10	Photographs	

Annex 4-3: Notification and Hold Points

Clause Reference	Notification Points	Hold Points
4.7		Supply and Install Material Manual
4.8		Maintenance Manual

Annex 4-4: Reference Standards

Thereferencestandardsandotherdocumentsreferredtointhis Sectionofthespecificationarelistedbelow:

BS 308	Technical drawings
ISO 5457	Size and layout of drawing sheets
BS 5536	Recommendations for preparation of technical drawings for microfilming
ISO 3272	Microfilming of technical drawings

5. Access

5.1 Wayleaves

5.1.1 General

5.1.1.1. A preliminary line route shall be provided by the Employer to enable the Contractor to start with the Contract works. The line route plan does not include facilities for storing material.

5.1.1.2. The Contractor will satisfy himself that the necessary rights of entry and access have been obtained before entry is affected.

5.1.1.3. The Contractor shall indicate to the Engineer such pipes or other obstructions, telephone, telegraph and power lines which infringe the clearances specified or otherwise fail to satisfy the requirements of the Specification.

5.1.1.4. The necessary permission for the removal of obstructions such as trees, houses, etc. and for the permanent removal or guarding of pipes, telegraph, telephone and power lines will be in the responsibility of the Contractor. The Employer may assist the Contractor in getting required permissions and permits.

5.1.2 Wayleave Schedule (not applicable)

5.2 Access to Site, Notice of Entry

5.2.1 Access Routes - General

5.2.1.1. The Contractor shall make all necessary arrangements for the general route for access to each or any position with the occupier as agreed by the Employer.

5.2.1.1. Subject to the provisions of the preceding paragraph the Contractor shall before commencing work, at his own expenses, do what is necessary to make the access suitable for his use and shall take all reasonable precautions to avoid damage, including, if required the erection of temporary fences or gates where permanent fences, hedges or gates have been removed. The Contractor shall not be entitled to any additional payment in the event of a particular access being difficult.

5.2.1.1. The Contractor shall be responsible for maintaining agreed access routes, without undue widening, in a usable condition for the duration of the Contract and the occupier shall not be put to any inconvenience in gaining access to his land or buildings. No unauthorized access route shall be taken by the Contractor.

5.2.2 Commencement of Work

The Contractor shall be responsible, before beginning work on any property for obtaining confirmation from the Engineer that wayleaves are in order and any agreed accesses, have not been altered and for giving not less than 48 hours' notice to the occupiers that work is to begin. Work shall proceed on any land within the requisite period of such notice being given to the occupier.

5.2.3 Suspension of Work

Where work is to be suspended without the expectation of it being resumed within the specified period, the Contractor must notify the occupier of such intention and shall similarly give the occupier prior notification of the resumption of work. The purpose of this clause is to assist in maintaining good relations between the occupier, the Contractor and the Employer and to keep the occupier informed of what is going to happen on or across his land.

5.2.4 Compliance with Occupier's Requirements

The Contractor shall at all times during the execution of the Works ensure compliance with all such reasonable requirements of the occupier as are brought to the Contractor's notice by the Engineer.

5.2.5 Notice to Authorities

Before the Contractor carries out the stringing of conductors alone, or across power or telecom-munication circuits, public roads, etc., he shall give the requisite notice to the appropriate Authorities of the time and date when he proposes to perform the work and shall send a duplicate copy of each notice to the Engineer.

5.3 Route Clearance

For details of the clearance requirements for survey, access routes, line route, tower locations and conductor stringing please refer to **Annex5-1.**

5.4 Access Roads

Access roads/routes shall be identified by the Contractor themselves as and where necessary, and shall be constructed by them at their own expense and necessary compensations for damages thereof shall also be paid by the Contractor. The Employer's representative may assist the Contractor in his negotiations with the landowners about such compensation etc.

5.5 Crossing of Obstacles

5.5.1 General

The Contractor shall, at his own expense, make any necessary arrangements and take the necessary precautions where the route crosses buildings, telecommunication, power or pipe lines, orchards, gardens, railways, antiquities or other obstructions or ground over or across which erection cannot be carried out in the normal manner or has to be avoided. These arrangements must be submitted to the Engineer. **This is a Hold Point.**

Where a tower is set across a fence, hedge, bank or wall, the Contractor shall remove and reinstate the fence, hedge, bank or wall at his own expense and he shall be responsible at his own expense for making good to the satisfaction of the Engineer, owners and tenants concerned, all land, property, roads, drains, fences, walls, hedges, gates and the like which he has damaged or disturbed during the execution of tile Contract Works and shall remove all surplus material after erection. The Contractor shall take proper precautions to prevent the straying of and damage to livestock until after the backfilling of excavations and permanent reinstatement of fences, walls, hedges, gates and the like is completed.

Where the *Underground* line is set across a power line, telecommunication line, gas pipe line, sewerage line, drain, fence, hedge, bank or wall etc. and in case the said existing installation cannot be by passed through re-route, the Contractor shall remove and reinstate the existing installation at his own expense and he shall be responsible at his own expense for making good to the satisfaction of the Employer, owners and tenants concerned, all land, property, roads, drains, fences, walls, hedges, gates and the like which he has damaged or disturbed during the execution of the Contract Works and shall remove all surplus material after installation. The Contractor shall take proper precautions to prevent the straying of and damage to livestock until after the backfilling of excavations and permanent reinstatement of such installation which is completed.

5.5.2 Public Utilities

The Contractor shall obtain all necessary permissions, licenses or approvals from authorities which are required for any part of the work. The Employer shall assist the Contractor in obtaining those permissions. All costs for such permissions shall deem to be included in the Contract Price.

The Contractor shall ensure that the erection of the Contract Works does not cause damage to or interference with existing telecommunication, power or pipe lines.

Where appropriate Authorities affected deem it necessary for the protection of their employees, property, or the public or for the assistance of traffic to provide flagmen and watchmen, the cost of such provision shall be borne by the Contractor. Where required by the appropriate Authorities work shall be carried on outside normal hours and at the Contractor's own expense.

The Contractor shall also be liable to make good at least to the original condition or compensate the owners, operators and users or any public undertaking in respect of any damage however caused to their property, lands or roads arising, out of or in consequence of the execution of the Works.

5.5.3 Scaffolding

The Contractor shall provide all necessary scaffolding and the like for the crossing of telecommunications or power lines, roads, railways buildings or other obstacles. The Contractor shall advise the Employer in each instance of the scaffolding he proposes to use. Drawings of the proposed scaffolding shall be submitted to the Employer, and the appropriate regulatory authorities for approval. **This is Hold Point.**

5.5.4 Live Line Scaffolds

The scaffolding which is used to cross specified low, medium and high voltage power lines shall be of such dimensions and allow such clearances that the power lines being crossed may remain in commission during construction of the new transmission line. Shutdowns on the lines to be crossed may be given for construction of new line but shall not be given continuously for longer periods. Such restrictions in building and use of the scaffolds shall not be grounds for claiming additional costs. Design and construction of the live line scaffold shall not be inferior to the minimum standards outlined in the following clauses.

5.5.5 Live Line Scaffolds - Construction

5.5.5.1. The scaffold shall be designed to withstand the maximum design wind speed, except that a reduced return period will be accepted. Consideration shall also be given due to impact loading, due to dropping of the upper phase conductor.

5.5.5.2. The scaffold shall, unless otherwise approved by the Employer, consist of 3 m wide 300 mm square mesh nylon nets attached to steel wire ropes running perpendicular to the lower line route, carried by metal scaffolding at 3 m intervals. The nets shall be attached to the catenary wires by means that do not require the presence of any persons on the net or the catenary wires whilst the lower line is alive. An additional movable walk net laid over the 300 mesh nets may be used whilst the lower line is dead.

5.5.5.3. Normally steel or aluminium tubular scaffolding to BS 1139 and BS 6323, should be used, the use of performed units or frames shall be subject to the Employer's approval.

5.5.5.4. The mechanical construction shall be in accordance with BS 5950. Reference shall also be made where appropriate to BS 5973.

5.5.5.5. The design of the scaffold shall have due regard to the requirements of safety with particular respect to accidental contact with live conductors during construction, use and removal.

5.5.5.6. The scaffold including foundations shall be designed and constructed to ensure stability during the process of erection and removal, and also at times when work has ceased for any reason including adverse weather conditions. The foundations shall be suitable for the ground concerned.

5.5.5.7. The scaffold shall extend at least 5 m either side of the outermost conductors of the upper line. A maximum of 2 m of this distance may be provided by means of catchers.

5.5.5.8. Catchers shall be provided at each end of each scaffold support. The catchers may be vertical or inclined to a maximum angle of 450 from the vertical. They shall be capable of withstanding

the specified impact loads without excessive distortion that would permit a falling conductor to approach or touch a live-line.

5.5.5.9. The upper parts of the scaffold shall be provided with soft wood rubbing boards or otherwise protected in an approved manner to prevent damage to the conductors resting on or being drawn over the guard. Soft wood poles may be used for this purpose. The height of these boards shall be sufficient to prevent the conductor damaging the nylon net. To avoid damaging the conductors no object other than non-metallic lashing or the catchers shall protrude above the rubbing boards.

5.5.5.10. Sufficient endless or double ended lead lines for hauling over pilot wires shall be placed over the scaffold prior to re-energising of the lower line.

5.5.5.11. The side supports shall have working platforms to facilitate the required running of conductors and pilot wires. Working platforms shall be provided with hand rails, toe boards and notices warning of the danger of live conductors. The heights of hand rails shall be 1m and the toe boards 230 mm. Each working platform shall have a notice plate indicating the 'Safe Climbing Height'.

5.5.5.12. The scaffolds shall be fitted with danger plates at intervals of not more than 6m along the anticlimbing device with at least one plate on each face of the structure.

5.5.5.13. The scaffolds shall be constructed to prevent unauthorised access or climbing by the use of barbed wire anti-climbing devices, fences or other means approved by the Employer.

5.5.5.14. The scaffolding shall be lit with red warning lamps from 1/2 hour before sunset to 1/2 hour after sunrise if erected within 2m from a highway or footpath without an intervening fence. The scaffold Contractor shall provide or arrange for the supply and/or maintenance of these lamps (e.g. with the line Contractor).

5.5.5.15. If the scaffolding is constructed adjacent to a roadway, a guard constructed from steel drums filled with soil or a soil bund shall be provided and suitably lit.

5.5.5.16. Where possible the resistance to earth of the scaffold shall be less than 10 ohms. Special consideration by the Employer and the lower line operator shall be given in cases where this is not attainable with a reasonable number of driven earth rods.

5.5.5.17. Bonding the scaffold to the earthing systems of either the live-line, or the line under construction is not normally acceptable. In the former case a nearby line fault could cause the scaffold to become live. In the latter case a fault between the live-line and the scaffold could cause components of the line under construction to become alive, particularly as it earthing system may not be complete.

5.5.5.18. The earth rods should normally be driven into the ground around the outside and approximately 1m from the scaffold structure. The rods should be securely connected electrically and mechanically to the scaffold structure by flexible copper or aluminium leads with minimum cross-sectional areas of 64 mm^2 or 100 mm^2 respectively.

5.5.5.19. Drawings of the scaffold, complete with details of the clearance plates and earthing arrangement, together with supporting, calculations shall be submitted to the Employer and appropriate regulatory authorities for approval. **This is a Hold Point.**

5.6 Damage

5.6.1 General

The Contractor shall take all reasonable precautions to avoid damage to land, property, roads, crops, field drains, fences walls, hedges, gates, trees and the like and shall ensure that the work is adequately supervised so that any damage is reduced to the minimum. The Contractor shall pay compensation to the owners/tenants for damages of crops, trees and houses during the project implementation within the wayleaves (right-of-way) which are unavoidable for construction of the transmission line. The Employer's representative shall assist the Contractor in his negotiations with the landowners about such compensation.

5.6.2 Contractor's Responsibility

The Contractor's liability for loss or damage shall extend to any such loss or damage resulting from the employment of a Subcontractor. This does not relieve the Contractor of his liability for all actions of his Subcontractor.

5.6.3 Livestock, Dogs

Adequate provision shall be made by the Contractor to prevent the straying of or injury to livestock during the execution of the Works and until the permanent reinstatement of fences, walls, hedges, gates and the like is completed.

The Contractor shall not bring any dog on or near the site or suffer or permit any of his employees, representatives or agents or any Subcontractor to bring any dog on or near the site and shall cause the immediate removal of any dog which may be on or near the Site in breach of this provision.

The Contractor shall be liable for any injury to or loss of livestock due in the opinion of the Engineer to failure to comply with the above requirements.

Annex 5-1: Route Clearance

Where clearing is in the opinion of the Employer necessary, the following requirements shall be observed. Trees and tall scrub shall be cleared to a distance of 14 m for 132 kV,20 m for 230 kV and 23m for 400kV on either side of the centreline of the route. Trees and bushes shall be cut down to a height of not more than 1.0 m above ground level. In addition, tall trees outside the cleared area, of such height that they could fall within 2 m of conductors, shall be trimmed by the Contractor. No tree may be felled without the express permission of the Employer. **This is a Hold Point.**

Felled trees and scrub shall be removed from a path 3.5 m wide and running as far as possible continuously along the route. The Contractor shall grub up tree stumps and roots from this track.

All trees, bushes, bamboo and any other vegetation which normally grows to a height of 2.5 m or more shall be treated by an approved non-toxic, non-residual agent to prevent further growth.

The Contractor shall clear a 3.5 m wide agreed construction access track from public roads, of all trees, stumps, scrub and vegetation to tower positions as required by the Employer.

All felled trees or tree trimmings shall remain the property of the landowner.

The Contractor shall be responsible to take clearance from relevant authorities. The Employer shall cooperate in this regard.

Annex 5-2: Access Roads

Access roads/routes shall be identified by the Contractor themselves as and where necessary, and shall be constructed by them at their own expense and necessary compensations for damages thereof shall also be paid by the Contractor. The Employer's representative shall assist the Contractor in his negotiations with the landowners about such compensation etc.

Annex 5-3: Engineering Documents to be Submitted by Contractor

Clause Reference	Document Description	Comment
5.3	Route Clearance	
5.5.3	Scaffolding	
5.5.4	Live Line Scaffolding	

Annex 5-4: Notification and Hold Points

Clause Reference	Notification Points	Hold Points
5.3		Route Clearance
5.5		Crossing of obstacles
5.5.3		Scaffolding drawings
5.5.5		Live line scaffold drawings

Annex 5-5: Reference Standards

Thereferencestandardsandotherdocumentsreferredtointhis Sectionofthespecificationarelistedbelow:

BS 1139	Metal scaffolding
BS 5950	Structural use of steel work in building
BS EN 12811-1	Code of practice for access and working scaffolds and special scaffold structures in steel
BS 6323	Specification for seamless and welded steel tubes for automobile, mechanical and general engineering purposes.
BS EN 12810-1	Facade Scaffolds
EN 10296/10297/10305	Welded circular steel tubes/seamless circular tubes/steel tubes for precision application

6. Survey, Profile, Geotechnical Investigations and Field Quality Plan

6.1 General Information & Scope of Work

6.1.1. The Engineer will indicate to the Contractor either on maps or during visits to the sites the proposed route of the transmission line, with approximate positions of the angle and terminal towers and the positions of such intermediate towers as it may have been desirable to determine during preliminary wayleave negotiations. The Contractor shall give the Engineer the requisite period of notice prior to commencing the survey. **This is a Hold Point.**

6.1.2. The technical specifications covers detailed survey including route alignment based on the intermediate GPS readings & Tentative route alignment finalized by the Employer, profiling, tower spotting, optimization of locations, check survey, contouring, and soil investigation for the transmission lines / part of the transmission lines covered under this specification as included in the schedule of prices.

6.1.3. Contractor shall provide at site all required survey instruments to the satisfactions of the Employer so that the work can be carried out accurately according to specifications and drawings. The Contractor shall arrange to collect the data regarding change of course of rivers, major natural streams and canals, etc., encountered along the transmission line route from the best available sources and shall furnish complete hydrological details including maximum velocity discharge, highest flood level (H.F.L), scour depth etc. of the concerned rivers, major streams and canals.

6.1.4. The **scope of work** shall include the following:

a. Detailed survey using GPS, Total work stations, long range scanners &digital theodolite of reasonable accuracies or alternatively using ALTM (Airborne Laser Terrain Modelling) techniques, inter-alia including:
   - Digitized profiling along the selected route along with plan details.
   - Computer aided tower spotting & optimization
   - Soil resistivity measurement along the route

b. Check survey including digitized contouring at undulated / hilly tower locations;

c. Soil Investigation;

d. Preparation of survey reports including estimation of bill of quantities, identification and explanation of route constraints (like forest, animal/bird sanctuary, reserve coal belt areas, oil pipeline /underground inflammable pipe lines etc.), infrastructure details available en-route etc.

6.1.5. The **provisional quantities** for the scope of work are indicated in relevant Price Schedules of the bidding documents. The final quantities for route alignment & detailed survey (quantities in "km" unit) shall be the horizontal **route** length along the approved route alignment. The route alignment, detailed survey, including profiling & tower spotting, contouring, soil investigation, etc. shall be carried out by the Contractor as per the technical specifications stipulated herein.

6.1.6. The Contractor must note that the Employer shall not be responsible for loss or damage to properties, trees etc. due to Contractor's work during survey. The Contractor shall indemnify the Employer for any loss or damage to properties, trees etc. during the survey work.

6.1.7. The Contractor should note that Employer will not furnish topographical maps but will make available assistance that may be required in obtaining these by providing letters of recommendation to

the concerned authorities. Further, in case the Contractor opts for use of ALTM techniques for detailed survey, he shall be responsible for obtaining necessary clearances/permissions, as may be required from concerned authorities. The Employer will provide assistance that may be required in obtaining these clearances/ permissions by providing letters of recommendation to the concerned authorities.

6.1.8. The work shall be carried out by the Contractor using modern surveying techniques.

6.1.9. The Contractor shall also engage services of a reputed geo-technical/geologist consultant or experts from independent educational/research institutions for examining stability aspects of the selected transmission line route & tower locations in hilly terrain during finalization of tower spotting & construction of foundations.

6.1.10. After carrying out the detailed survey and soil investigations, the Contractor shall estimate complete BoQ of the transmission line(s) and submit the same as per the format of the 'Schedule of Prices' to the Employer.

6.2 Contractor's Survey

6.2.1 Access for Survey

For details of the access arrangement for survey, please refer to **Annex 5-1**. The Contractor's Surveyor shall in all cases announce himself to the occupier/landowner immediately before entering any private property for the purpose of survey. The Contractor shall comply with all national and local regulations regarding barricades, detour arrangements, and warning signs. Damage to roads, footpaths, bridges, ditches, etc., caused by the Contractor shall be repaired at his expense.

6.2.2 Survey Methodology & Precision

6.2.2.1 Survey Methodology

6.2.2.1.1. All elevations shall be referenced to benchmarks established by the Public Work Division of Bangladesh / Survey of Bangladesh. Survey operations shall begin and end at benchmarks approved by the Employer.

6.2.2.1.2. During the levelling of the profile, check surveys will be affected at intervals not exceeding 50 km with benchmarks of known elevations. The difference in elevations as surveyed by the Contractor and as declared by Public Work Division of Bangladesh / Survey of Bangladesh for these benchmarks shall not exceed the precision required for 3rd order surveys $e \leq 24k$ where k is the distance between benchmarks in km and e is the difference between elevations in mm but not exceed 300 mm.

6.2.2.1.3. In the absence of suitable benchmarks the levelling shall be done by two independent levelling parties working in opposite directions along the same line. The difference in elevations between the two surveys shall not exceed the precision required for 3rd order surveys as stated above.

6.2.2.1.4. All important objects and features along the transmission line centreline (railways, highways, roads, canals, rivers, transmission lines, distribution lines, telephone lines etc.) shall be

surveyed and located with a positional accuracy of 1:2000 between points of known horizontal position.

6.2.2.1.5. Contractor shall survey a corridor along a line route, not just the centreline. The width of the corridor will be at least as per the following table:

Transmission Line	Survey Width
132kV	30m (15m from the centre line either side)
230kV	50m (25m from the centre line either side)
400 kV	60m (30 m from the centre line either side)

6.2.2.1.6. The data density shall be as per Clause no. 6.2.6.1. A centre line survey for pegging shall still be required following the approved plan and profile drawings.

6.2.2.1.7. The XYZ survey measurements can be obtained by using one or more of the following methods:

Aerial photogrammetry;
Flying the route by helicopter or fixed wing aircraft using specialized aerial laser scanning instruments for Aerial Laser Surveys (ALS);
Ground survey using GPS or electronic distance measuring equipment.

6.2.2.1.8. All these methods of survey measurements should capture information as per the proposed feature codes.

6.2.2.2 Survey Accuracy

Photogrammetry

The accuracy of any point on the ground corridor profile shall be ± 1m horizontal and ± 0.25m vertical. A DXF file shall be imported into PLS CADD.The Contractor may choose to do the survey manually (cf. clause 1.3) or use GPS or laser. In every case, the geo-referenced ECW file for topographic image would be very helpful.

Laser Scanning

The accuracy of any point on the ground corridor profile shall be ± 0.15m horizontal and ± 0.15m vertical from absolute position. A LAS file will be imported into PLS CADD.

GPS

The accuracy of any point on the ground corridor profile shall be ± 1m horizontal and ± 0.3m vertical. The accuracy is governed by the type of GPS used, availability of satellites, Geoid model for the relevant area and vegetation. Accuracy is in the order of ± 1m horizontal and ± 2m vertical for differential GPS, ± 0.025m horizontal and ± 0.05 vertical for RTK GPS.

6.2.3 Route Alignment

6.2.3.1. The route alignment shall be carried out by the Contractor using topographical maps and preliminary route alignment finalized by the Employer with GPS.

6.2.3.2. The routing of the transmission line shall be most economical from the point of view of construction and maintenance. The Contractor shall identify & examine alternative route alignments and suggest to the Employer the optimal route alignment.

6.2.3.3. Routing of transmission line through protected/reserved forest area should be avoided. In case it is not possible to avoid the forests or areas having.

6.2.3.4. Large trees completely, then keeping in view of the overall economy, the route should be aligned in such a way that cutting of trees is minimum.

6.2.3.5. The route should have minimum crossings of major river, national/state highways, overhead EHV power line and communication lines.

6.2.3.6. The number of angle points shall be kept to minimum.

6.2.3.7. The distance between the terminal points specified shall be kept shortest possible, consistent with the terrain that is encountered.

6.2.3.8. Marshy and low lying areas, river beds and earth slip zones shall be avoided to minimize risk to the foundations.

6.2.3.9. It would be preferable to utilize level ground for the alignment.

6.2.3.10. Crossing of power lines shall be minimized. Alignment will be kept at a minimum distance of 300 m from power lines to avoid induction problems on the lower voltage lines.

6.2.3.11. Crossing of communication line shall be minimized and it shall be preferably at right angle. Proximity and parallelism with telecom lines shall be eliminated to avoid danger of induction to them.

6.2.3.12. Areas subjected to flooding such as canals shall be avoided.

6.2.3.13. Restricted areas such as civil and military airfield shall be avoided. Care shall also be taken to avoid aircraft landing approaches.

6.2.3.14. All alignment should be easily accessible both in dry and rainy seasons to enable maintenance throughout the year.

6.2.3.15. Certain areas such as quarry sites, tea, tobacco and saffron fields and rich plantations, gardens & nurseries which will present the Employer problems in acquisition of right of way and way leave clearance during construction and maintenance should be avoided.

6.2.3.16. Angle points should be selected such that shifting of the point within 100 m radius is possible at the time of construction of the line.

6.2.3.17. The line routing should avoid large habitations, densely populated areas, forest, animal /bird sanctuary, reserve coal belt areas, oil pipe line/underground inflammable pipe lines etc. to the extent possible.

6.2.3.18. The areas requiring special foundations and those prone to flooding should be avoided.

6.2.3.19. For examination of the alternatives & identification of the most appropriate route, besides making use of information/data/details available/extracted through, the Contractor shall also carryout reconnaissance /preliminary survey as may be required for verification & collection of additional information / data / details.

6.2.3.20. The Contractor shall submit his preliminary observations & suggestions along with various information/data /details collected and also processed satellite imagery data, scanned topographical map data marked with the alternative routes etc. The final evaluation of the alternative routes shall be conducted by the Contractor in consultation with Employer's representatives and optimal route alignment shall be proposed by the Contractor. Digital terrain modelling using contour data from topographical maps shall be done by the Contractor for the selected route. A fly through perspective using suitable software(s) shall be developed for further refinement of the selected route, if required. Site visit and field verification shall be conducted by the Contractor jointly with the Employer's representative for the proposed route alignment.

6.2.3.21. Final digitized route alignment drawing with latest topographical and other details/features including all rivers, railway lines, canals, roads etc. up to 8 km on both sides of selected route alignment shall be submitted by the Contractor for Employer's approval along with report containing other information /details as mentioned above.

6.2.3.22. Changes in the route alignment, if any, during detail survey, shall be incorporated in the final digitized route alignment drawings.

6.2.4 Detailed Survey

6.2.4.1 The detailed survey shall be carried out using GPS, Total stations, digital theodolites etc. along the approved route alignment. As an alternative, the Contractor may also use ALTM (Airborne Laser Terrain Modelling) techniques of equal or better accuracy for the detailed survey.

6.2.4.2 Soil resistivity, along the route alignment shall be measured in dry weather by four electrode method keeping inter-electrode spacing of 50 metres. For calculating soil resistivity formula $2\pi ar$ (Where a = 50m and r = megger reading in ohms) shall be adopted. Measurement shall be made at every 2 to 3 km along the length of the route. In case soil characteristics changes within 2 to 3 km, values shall have to be measured at intermediate locations also. Megger reading and soil characteristics should also be indicated in the soil resistivity results.

6.2.5 Route Marking

6.2.5.1 The route of the transmission line shall be recorded using GPS/DGPS of positional accuracy as per clause no. 6.2.2.2.

6.2.5.2 The coordinates of all the angle points as well as other important crossings, landmarks etc. shall be recorded using GPS for easy relocating.

6.2.5.3 At the starting point of the commencement of route survey; the coordinates shall be recorded. A punch mark on the top section of the angle iron shall be made to indicate the location of the survey instrument. The coordinates of the location of the survey instrument shall also be recorded. Further, the coordinates at prominent position at intervals of not more than 750 meter along the transmission line to be surveyed up to the next angle point shall also be recorded. Wooden pegs of 50 x 50 x 650 mm size shall also be driven at prominent position at intervals of not more than 750 m along the transmission line to be surveyed up to the next angle point. Wire nails of 100mm length should be fixed on the top of these pegs to show the location of instrument. The peg shall be driven firmly into the ground to project 100 mm only above ground. Wherever the line alignment crosses the EHT line, railway line, P&T line or roads, the Contractor shall record coordinates on the points of crossing. Wherever line route alignment passes over permanent land marks such as rock, boulders, culverts etc. suitable white paint marks with directional and Employer markings shall be made and

coordinates recorded. At angle position stone/concrete pillars of 150 x 150 x 100 mm in size with Employer marked on them shall be embedded into the ground for easy identification.

6.2.6 Profiling

6.2.6.1 The complete profiling along the route shall be carried out using modern surveying equipment viz. Total stations, DGPS etc. Reference levels (R/Ls) at an interval of 5m in Plain terrain and 1m in hilly terrain along the route are to be presented. Besides the centre line survey data all survey data points within the corridor mentioned in clause no. 6.2.2.1.5 shall be presented in the computer-aided tower spotting software (PLSCADD) at a grid of 5mx5m (1mx1m preferable) for plain terrain and 1mx1m (0.5mx0.5m preferable) for hilly terrain. R/Ls at other undulations along the route as well as in the route plan and other route details viz. crossings, building & structures, power lines, ponds, canal, rivers, gardens, trees & other infrastructure etc. shall also be recorded. Areas along the route, which in the view of the Contractor, are not suitable for tower spotting, shall also be marked.

6.2.6.2 The complete profiling details shall be digitized and the data shall be prepared & stored in the format compatible to computer-aided tower spotting software.

6.2.6.3 A printed/plotted output of the digitized profiling shall be submitted by the Contractor to the Employer's for review before taking up computer-aided tower spotting.

6.2.7 Optimization of Tower Location / Tower Spotting

6.2.7.1 Optimization of tower locations including profiling shall be done by the Contractor using computer-aided tower spotting software (PLSCADD) and shall furnish sample calculations and manual tower spotting drawings for some typical sections.

6.2.7.2 The sag-tension characteristics of the conductor as well as tower spotting data shall be furnished by the Employer to the Contractor during execution stage. Sag template curves, if any required for Employer's spotting purposes, shall be prepared by the Contractor.

6.2.7.3 General description of towers is indicated in Section-I of this specification for information of the Bidders.

6.2.8 Tower Spotting

The Contractor shall submit to the Engineer the requisite copies of route maps, they shall also submit requisite copies of the profile drawings upon which shall be indicated the proposed location and type of each tower, spans, section lengths, (i.e.) distances between tension towers), equivalent spans, wind and weight span, difference in level between phase conductor attachment points and the sag templates used. **This a Hold Point.** Also on the profile shall be plotted the relevant position of the bottom or lowest phase conductor at the specified maximum conductor temperature and another line parallel to the phase conductor line and at the minimum statutory ground clearance specified below it.

Towers shall be so located that the span criteria specified in **Annex 8-5** is not exceeded.

While profiling & spotting the towers, the following shall be borne in mind:

a) Span

The number of consecutive spans between the section points shall not exceed 15 spans or 5 km in plain terrain and 10 spans or 3km in hilly terrain. A section point shall comprise of tension point with a section tower as mentioned in the **Annex** of 'Tower' section.

b) Extension/Truncation

An individual span shall be as near to the normal design span as possible. In case an individual span becomes too short with normal supports on account of undulations in ground profile, one or both the supports of the span may be extended by inserting standard body/leg extension. In case of locations where the ground clearance is available, truncated towers may be spotted. The provisions kept in the design of towers w.r.t. body/leg extensions, truncations shall be intimated to the Contractor by the Employer during execution stage.

c) Loading

There shall not be any upward force on suspension towers under normal working conditions and the suspension towers shall support at least the minimum weight span as provided in the designs. In case uplift is unavoidable, it shall be examined if the same can be overcome by adding standard body extensions to the towers failing which tension towers designed for the purpose shall be deployed at such positions.

d) Road Crossing

At all important road crossings, the tower shall be fitted with normal suspension and tension insulator strings depending on the type of tower, but the ground clearance at the roads under maximum temperature and in still air shall be such that even with conductor broken in adjacent span, ground clearance of the conductor from the road surfaces will not be less than specified minimum ground clearance.

e) Railway Crossings

All the railway crossings coming along the transmission line route shall be identified by the Contractor. At the time of detailed survey, the railway crossings shall be finalized as per the regulation laid down by the Railway Authorities.

The crossing shall normally be at right angle to the railway track.

The minimum distance of the crossing tower shall be at least equal to the height of the tower plus 6 meters away measured from the centre of the nearest railway track.

No crossing shall be located over a booster transformer, traction switching station, traction Substation or a track cabin location in an electrified area.

Minimum ground clearance above rail level of the lowest portion of any conductor under condition of maximum sag shall be maintained as mentioned in the **Annex**.

f) Power line Crossings

The angle of crossing shall be as near to 90 degree possible. In order to reduce the height of the crossing towers, it may be advantageous to remove the ground-wire of the line to be crossed (if this is possible and permitted by the Employer of the line to be crossed).

Minimum clearance in meters between lines when crossing each other is mentioned in **Annex.**

Pipeline crossings shall be as per provision mentioned in **Annex**.

g) Telecommunication Line Crossings

The angle of crossing shall be as near to 90 degree possible. However, deviation to the extent of 30 degree may be permitted under exceptionally difficult situations. At the crossing of power supply and telecommunication circuits, no part of the structure of one support shall be placed less than 35 m from any part of the support structure of the other circuit.

When the angle of crossing has to be below 60 degree, the matter will be referred to the authority in charge of the telecommunication System. On a request from the Contractor, the permission of the telecommunication authority may be obtained by the Employer.

Also, in the crossing span, power line support will be as near the telecommunication line as possible, to obtain increased vertical clearance between the wires.

h) River Crossings

When the transmission line crosses a river or closely runs parallel to a river, data regarding historical bank line movement, future development, geo-morphology and hydrostatics of that river (as stated in **Article 6.8**) should be collected and analyzed. Based on the analysis, most stable route for the transmission line to cross the river should be proposed in the route survey report.

During finalization of river crossing route, shortest feasible width of the river should be taken into consideration. Optimization of tower locations and minimum angle deviation should also be taken into consideration during finalization of river crossing route.

i) Details En-route

All topographical details, permanent features, such as trees, building etc. within the width (either side) mentioned in the Annex shall be detailed on the profile plan.

6.2.9 Clearance from Ground, Building, Trees etc.

6.2.9.1. Clearance from relevant structures shall be provided in conformity with criteria specified in **Annex6-1.**

6.2.9.2. The Contractor shall count, mark and put proper numbers with suitable quality of paint at his own cost on all the trees that are to be cut (By the Contractor) at the time of actual execution of the work as detailed below. The Contractor may please note that Employer shall not pay any compensation for any loss or damage to the properties or for tree cutting due to Contractor's work.

6.2.9.3. To evaluate and tabulate the trees and bushes coming within the width mentioned in “Access” Section on either side of the central line alignment the trees will be numbered and marked with quality paint serially from angle point 1 onwards and the corresponding number will be painted on the stem of trees at a height of 1 meter from ground level. The trees list should contain the following:

a. Girth (circumstances) measured at a height of 1 meter from ground level.
b. Approximate height of the tree with an accuracy of +2 meters.
c. Name of the type of the species/tree.
d. The bushy and under growth encountered within the 40m should also be evaluated with its type, height, girth and area in square meters, clearly indicating the growth in the tree/bush statement.

6.2.9.4. The Contractor shall also identify the forest/non-forest areas involved duly authenticated by concerned authorities as follows:

a. A statement of forest areas with survey/compartment numbers (all types of forest RF / PF / acquired forest / revenue forest / private forest / forest as per dictionary meaning of forest etc.)
b. A statement of non-forest areas with survey/compartment numbers
c. Tree cutting details (girth-wise & specie-wise)
d. Marking of forest areas with category on topology sheets 1:250,000 showing complete line route, boundaries of various forest divisions and their areas involved.
e. Village forest maps of affected line and affected forest area and marking of the same.

f. Forest division map showing line and affected forest area.

6.2.10 Preliminary Schedule

The profile sheets showing the locations of the towers together with preliminary schedules of quantities indicating tower types, wind & weight spans, angle of deviation, crossing & other details etc. shall be submitted by the Contractor for review & approval by Employer's Site Engineer in charge.

6.2.11 Profile Drawings - Size & Scales

6.2.11.1. The profile shall either be drawn on a melinex type material or as otherwise approved with printed grid lines of increasing thickness in 1, 5, 10 and 50 mm squares and shall be drawn on the reverse side of the melinex to the grid lines.

6.2.11.2. Computer-plotted profiles on plain plastic drawing sheets will be accepted by the Engineer. However, the format of the profile shall not differ from the details specified in the following clauses.

6.2.11.3. Unless specified to the contrary the scale of the profile shall be:

1:2000 horizontally and
1:200 vertically

6.2.11.4. The profile shall be plotted with the direction of the line route left to right on the profile sheet. In general, individual profile sheets shall commence and finish at tension supports but where this is not practicable and continuation sheets are found to be necessary the ground line is to be drawn so that there is an overlap of at least 300 mm between adjacent sheets. The chainage of each section between tension structures shall start at zero, be on a 50 mm printed grid line and not less than 200 mm from the left hand margin. Each section shall normally be started on a new sheet. The date of survey of each section shall be added.

6.2.11.5. If more than one section is drawn on one sheet a gap shall be left in the ground line of not less than 200 mm.

6.2.12 Profile Drawings-Details

The following details and information are to be included in the profile drawings:

a. At each angle position a 'tie-in' sketch shall be provided on the profile sheet. This sketch shall show clearly the location of the support using as reference where possible points which can be located on the ground and on the 1:5,000 or closest available scale of survey map. The direction of the line and angle of deviation are to be shown stating also whether the deviation is left or right. Where reliable maps of reasonable scale and accuracy are not available for locating and plotting support positions, survey methods acceptable to the Engineer shall be employed to establish grid coordinates and supports towers and ground features shall be related to these.

b. Where ground slope across the line route exceeds 1 in 25, the level of ground left and right of the centre line shall be recorded at specified horizontal offset distances, where the side slope is uniform. Where the slope breaks upwards beyond this distance levels will be recorded up to a

specified horizontal offset distance. The offset levels shall be indicated on the profile as broken and/or chain lines and the distances off-line stated.

c. The profile shall show all changes of level of 300 mm or more along the route centre line and alone, the off-set lines. All features such as hedges, fences, graves, ditches, roads, railways, rivers, buildings, canals, telephone and railway lines and all power lines shall be shown. Road numbers or name of roads shall be stated or, if unclassified, the destination. Railways are to be given the destination, number of tracks, whether or not electrified and the level at the top of rail stated.

d. The chainage is to be shown at each 300m and at every geographical feature or obstruction. Chainage shall also be given to all line pegs.

e. The specified Datum shall be the basis for all levels and the level above the specified Datum shall be shown at 10m vertical intervals at the beginning and end of each profile sheet. Levels shall be shown at each peg on line and at every obstruction or geographical feature.

f. The visual nature of the ground shall be noted, whether cultivated, woodlands, etc. with special reference to marsh, soft ground or rock and other relevant information such as soil instability.

g. All buildings or high obstructions within 30m of the centre line shall be shown dotted at their measured height with the distance left or right of line indicated.

h. Where the ground contour rises to a point which would be less than 100 mm from the top of the profile sheet, the ground line shall be terminated and continued on a new sheet with an overlap of 300m of line route.

i. The following detail shall be shown for crossings of power lines:
    a. Voltage and type of construction;
    b. Ground levels at point of crossing and support structures;
    c. Height of top conductor and earth wire at point of crossing and at points of support;
    d. Distance from crossing point to support structures along route of line to be crossed;
    e. Angle of crossing;
    f. Temperature at time levels were taken (state date and time);
    g. Support structure numbers.
    h. Any other information requested by the Employer's Engineer.

j. Along the bottom of the profile sheet shall be drawn, to the same scale as the horizontal scale of the profile, a route map showing all relevant details, within a distance of 30m each side of the route centre line. All items covered by subparagraphs (a) and (i) above, as appropriate, shall be included.

6.2.13 Check Survey

The Contractor shall carry out a check survey of the whole route. Profile drawings will be made available to the Contractor, who will be required to check the profile (ground line) survey. The line routes may need to be changed at some locations due to site constraints. The Contractor shall propose such changes after surveying the new line routes. No extra cost for survey and preparation of all drawings of such change of route will be paid to the Contractor.

The Contractor is required to check thereon the proposed tower positions and submit the profile drawing to the Engineer. Profile details and tower locations shall be in accordance with the preceding clauses.

6.2.14 Survey Report

6.2.14.1. Complete BoQ of the transmission lines as per the format given in the 'Schedule of Prices' shall be furnishedafter approval of Plan & Profile.

6.2.14.2. Each angle point locations shall be shown with detailed sketches showing existing close by permanent land marks such as specific tree(s), cattle shed, homes, tube wells, temples, electric pole /tower, telephone pole, canal, roads, railway lines etc. The relative distance of landmarks from the angle points and their bearings shall be indicated in the sketch. These details shall be included in the survey report.

6.2.14.3. Information w.r.t infrastructure details available en-route, identification and explanation of route constraints, etc. shall also be furnished in the Survey report and shall inter-alia include the following:

6.2.14.4. Information regarding infrastructural facilities available along the final route alignment like access to roads, railway stations, construction material sources (like quarry points for stone, sand and availability of construction water), labour, existing transport facilities, fuel availability etc. shall be furnished in the survey report.

6.2.14.5. All observations which the Contractor thinks would be useful to the construction of the transmission lines mentioned under scope of work are to be reported.

6.2.14.6. Suggestions regarding the number of convenient zones (line segments / portions) in which the entire alignment can be divided keeping in view the convenience of corporation are to be given.

6.2.14.7. Suggestions regarding location for setting up stores during line construction in consultation with Employer's representative shall also be provided by the Contractor.

6.2.14.8. Working months available during various seasons along the final route alignment, with period, time of sowing & harvesting of different type of crops and the importance attached to the crops particularly in the context of way leave problems and compensation payable shall be stated by the Contractor.

6.2.14.9. Availability of labour of various categories and Contractors of civil works shall also be reported.

6.2.14.10. Some portions of the line may require clearance from various authorities. The Contractor shall indicate the portion of the line so affected, the nature of clearance required and the name of concerned organizations such as local bodies, municipalities, P&T (name of circle), Inland navigation, Irrigation Department, Power Utilities and Divisional Forest/ wild life Authorities etc.

6.2.14.11. All safety regulation shall be complied by the Contractor during routing / survey /construction of line through patches of dense forest/wild life. The Employer has, however, obtained forest clearance on the basis of tentative route alignment.

6.2.14.12. All the requisite data for processing the case for statutory clearances shall be provided along with the report.

6.2.14.13. The Contractor shall also collect & report details pertaining to pollution levels envisaged along the transmission line.

6.2.14.14. Six copies of survey reports shall be furnished by the Contractor to the Employer.

6.3 Geotechnical Investigation

6.3.1 General

6.3.1.1 Geotechnical investigation shall be undertaken in accordance with the technical requirements detailed in the following clauses. For details of the type and frequency of the investigation reference should be made to **Annex 6-2**.

6.3.1.2 Employer requires that a detailed Geotechnical investigation be carried out at various tower locations to provide the designer with sufficiently accurate information, both general and specific, about the substrata profile and relevant soil and rock parameters at site on the basis of which the foundation of transmission line towers can be classified and designed rationally.

6.3.1.3 All investigation, unless specified otherwise shall be in accordance with the requirements of BS 5930.

6.3.1.4 These specifications provide general guidelines for geotechnical investigation of normal soils. Cases of marshy locations and locations affected by salt water or saltpetre shall be treated as special locations and the corresponding description in these specifications shall apply. Any other information required for such locations shall be obtained by Contractor and furnished to Employer.

6.3.1.5 The Contractor shall give the Engineer the requisite period of notice prior to commencing the geotechnical investigation. **This is a Hold Point.**

6.3.2 Scope

6.3.2.1. The scope of work includes detail soil investigations and furnishing bore log data at various tower locations. Based on the bore log data / soil parameter /soil investigation results, the Contractor shall recommend the type of foundations suitable for each locations and the same shall be approved by the Employer.

6.3.2.2. These specifications cover the technical requirements for a detailed geotechnical investigation and submission of a detailed geotechnical report. The work shall include mobilization of all necessary tools and equipment, provision of necessary engineering supervision and technical personnel, skilled and unskilled labour, etc. as required carrying out the entire field investigation as well as laboratory tests, analysis and interpretation of data collected and preparation of the geotechnical report. The Contractor shall also collect data regarding variation of subsoil water table along the proposed line route. Detailed methodology for subsoil investigation shall be submitted before implementing the subsoil investigation. All laboratory tests shall be done at the test facility approved by the Employer. The Contractor may appoint a Subcontractor to carry out the site geotechnical investigation, but aforementioned works shall be supervised by a Contractor's Engineer who has a bachelor's degree in civil engineering and at least 5 years of site experience in geotechnical investigation work. All work and all lab work shall be witnessed by the above mentioned Contractor's Engineer who shall countersign all recorded data.

6.3.2.3. The Contractor shall make his own arrangements to establish the coordinate system required to position boreholes, tests pits and other field test locations as per the drawings/sketches supplied by Employer. The Contractor shall determine the reduced levels at these locations with respect to benchmarks used in the detailed survey. Two reference benchmarks shall be established based on survey data/details. The Contractor shall provide at site all required survey instruments to the satisfactions of the Employer so that the work can be carried out accurately according to specifications and drawings. The Contractor shall arrange to collect the data regarding change of course of rivers, major natural streams and nalas (canals), etc., encountered along the transmission line route from the best available sources and shall furnish complete hydrological details including maximum velocity discharge, silt factor, highest flood level (H.F.L), scour depth etc. of the concerned rivers, major streams and nalas.

6.3.2.4. The field and laboratory data shall be recorded in the formats recommended per relevant Standards. The Contractor shall submit to Employer two copies of field bore logs (one copy each to Employer project and Head Office) and all the field records (witnessed & countersigned by the Employer) soon after the completion of each boreholes/test.

6.3.2.5. Whenever the Contractor is unable to extract undisturbed samples, he shall immediately inform the Employer. Special care shall be givento locations where marshy soils are encountered and the Contractor in such cases shall ensure that the specified numbers of vane shear tests are performed and the results correlated with other soil parameters.

6.3.2.6. The Contractor shall interact with the Employer to get acquainted with the different types of structures envisaged and in assessing the load intensities on the foundation for the various types of towers in order to enable him to make specific recommendation for the depth, founding strata, type of foundation and the allowable bearing pressure.

6.3.2.7. After reviewing the Contractor's geotechnical investigation draft report, the Employer will call for discussions, to be held normally within one week, in order to comment on the report in the presence of Contractor's Geotechnical Engineer. Any expenditure associated with the redrafting and finalizing the report, traveling etc. shall be deemed included in the rates quoted for the geotechnical investigations.

6.3.2.8. The Contractor shall carry out all work expressed and implied in these specifications in accordance with the requirements of the specification.

6.3.2.9. The Contractor shall prepare and submit soil profiles along the transmission line route (in digitized form, with digitized route alignment drawing as base) indicating salient soil characteristics / features, water table, etc. based on detailed soil investigations and other details / information collected during detailed survey.

6.3.3 General Requirements

6.3.3.1. Wherever possible, the Contractor shall research and review existing local knowledge, records of test pits, boreholes, etc., types of foundations adopted and the behaviour of existing structures, particularly those similar to the present project.

6.3.3.2. The Contractor shall make use of information gathered from nearby quarries, unlined wells excavation etc. Study of the general topography of the surrounding areas will often help in the delineation of different soil types.

6.3.3.3. The Contractor shall gather data regarding the removal of overburden in the project area either by performing test excavations, or by observing soil erosion or landslides in order to estimate reconsolidation of the soil strata. Similarly, data regarding recent landfills shall be studied to determine the characteristic of such landfills as well as the original soil strata.

6.3.3.4. The water level in neighbouring streams and water courses shall be noted. The Contractor shall make enquiries and shall verify whether there are abandoned underground works e.g. worked out ballast pits, quarries, old brick fields, mines, mineral workings etc.

6.3.3.5. It is essential that equipment and instruments be properly calibrated at the commencement of the work. If the Employer so desires, the Contractor shall arrange for having the instruments tested at an approved laboratory at its cost and shall submit the test reports to the Employer. If the Employer desires to witness such tests, the Contractor shall arrange for the same.

6.4 Field Investigation for Soils

Tentative numbers of detailed soil investigation to be done are given in the price schedule of this bidding documents.

6.4.1 Boring

Boreholes are required for detailed soil investigations.

6.4.1.1 General Requirements

6.4.1.1.1. Boreholes shall be made to obtain information about the subsoil profile, its nature and strength and to collect soil samples for strata identification and for conducting laboratory tests. The minimum diameter of the borehole shall be 100mm and boring shall be carried out in accordance with the provisions of BS 5930 and the present specification:

6.4.1.1.2. All boreholes shall be at least 30m deep for normal soil conditions. The depth of boreholes at river crossings and special locations shall be at least 60m. If a strata is encountered where the standard penetration test records N values higher than 50, the borehole shall be advanced by coring at least 3 m further in normal locations and at least 6 m further for the case of river crossing locations with prior approval of the Employer. When the boreholes are to be terminated in soil strata, an additional standard penetration test shall be carried out at the termination depth. No extra payment shall be made for carrying out standard penetration tests.

6.4.1.1.3. Casing pipe shall be used when collapse of a borehole wall is probable. The bottom of the casing pipe shall at all times be above the test of sampling level but not more than 15 cm above the borehole bottom. In case of cohesion-less soils, the advancement of the casing pipe shall be such that it does not disturb the soil to be tested or sampled. The casing shall preferably be advanced by slowly rotating the casing pipe and not by driving.

6.4.1.1.4. In-situ tests shall be conducted and undisturbed samples shall be obtained in the boreholes at intervals specified hereafter. Representative disturbed samples shall be preserved for conducting various identification tests in the laboratory. Water table in the bore hole shall be carefully recorded and reported following BS 5930. No water or drilling mud shall be used while boring above ground water table. For cohesion less soil below water table, the water level in the borehole shall at all times be maintained slightly above the water table.

6.4.1.1.5. The borehole shall be cleaned using suitable tools to the depth of testing or sampling, ensuring least or minimum disturbance of the soil at the bottom of the borehole. The process of jetting through an open tube sampler shall not be permitted. In cohesive soils, the borehole may be cleaned by using a bailer with a flap valve. Gentle circulation of drilling fluid shall be done when rotary mud circulation boring is adopted.

6.4.1.1.6. On completion of the drilling, the Contractor shall backfill all boreholes as directed by the Employer.

6.4.1.2 Auger Boring

Auger boring may be employed in soft to stiff cohesive soils above the water table. Augers shall be of helical or post hole type and the cuttings brought up by the auger shall be carefully examined in the field and the description of all strata shall be duly recorded in the field bore log as per BS 5930. No water shall be introduced from the top while conducting auger boring.

6.4.1.3 Shell and Auger Boring

Shell and auger boring may be used in all types of soil which are free from boulders. For cohesion less soil below ground water table, the water level in the borehole shall always be maintained at or above ground water level. The use of chisel bits shall be permitted in hard strata having SPT-N value greater than 50 Chisel bits may also be used to extend the bore hole through local obstructions such as old construction, boulders, rocky formations, etc.

The rotary method may be used in all types of soil below water table. In this method, the boring is carried out by rotating the bit fixed at the lower end of the drill rod. Proper care shall be taken to maintain firm contact between the bit and the bottom of the borehole. Bentonite or drilling mud shall be used as drilling fluid to stabilize and protect the inside surface of the borehole. Use of percussion tools shall be permitted in hard clays and in dense sandy deposits.

6.4.2 Standard Penetration Test (SPT)

6.4.2.1 This test shall be conducted in all types of soil deposits encountered within a borehole, to find the variation in the soil stratification by correlating with the number of blows required for unit penetration of a standard penetrometer. Structure sensitive engineering properties of cohesive soils and sifts such as strength and compressibility shall not be inferred based on SPT values.

6.4.2.2 The test shall be conducted at the following depths:

Location	Test Depths (m)
Normal soils for open cast foundations	**2.0, 3.0, 5.0, 7.0, 10.0**
Pile foundation locations & special locations.	**Each level at an interval of 1.5m depth up to minimum 30 m depth.**

6.4.2.3 The spacing between the levels of standard penetration test and next undisturbed sampling shall not be less than 1.0 m. Equipment, accessories and procedures for conducting the test and for the collection of the disturbed soil samples shall conform to BS 5930 respectively. Blow count for the test shall be started 0.45m before reaching desired test depth and after cleaning of bore hole.

6.4.2.4 The test shall be carried out by driving a standard split spoon sampler in the bore hole by means of a 63.5kg hammer having a free fall of 0.76 m. The sample shall be driven using the hammer for 450 mm recording the bumper of blows for every 150 mm. The number of blow for the last 300 mm drive shall be reported as N value.

6.4.2.5 After 30m, the test shall be discontinued when the blow count is equal to 50. But 2 additional blow count for normal locations and 4 additional blow count for river crossing & special locations at 1.5m intervals shall be recorded after reaching first blow count of 50. At the level where the test is discontinued, the number of blows and the corresponding penetration shall be reported. Sufficient quantity of disturbed soil samples shall be collected from the split spoon sampler for identification and laboratory testing. The sample shall be visually classified and recorded at the site as well as properly preserved without loss of moisture content and labelled.

6.4.3 Sampling

6.4.3.1 General

6.4.3.1.1 Sufficient number of soil samples shall be collected. Disturbed soil samples shall be collected for soil identification and for conducting tests such as sieve analysis, index properties, specific gravity, chemical analysis etc. Undisturbed samples shall be collected to estimate the physical bearing capacity and settlement properties of the soil.

6.4.3.1.2 All accessories and sampling methods shall conform to BS 5930: all disturbed and undisturbed samples collected in the field shall be classified at site as per BS 5930.

6.4.3.1.3 All samples shall be identified with date, borehole or test pit number, depth of sampling, etc. The top surface of the sample in-situ shall also be marked. Care shall be taken to keep the core and box samples vertical, with the mark directing upwards. The tube samples shall be properly trimmed at one end and suitably capped and sealed with molten paraffin wax. The Contractor shall be responsible for packing, storing in a cool place and transporting all the samples from site to the laboratory within seven days after sampling with probe, protection against loss and damage.

6.4.3.2 Disturbed Samples

6.4.3.2.1 Disturbed soil samples shall be collected in boreholes at regular intervals. Samples shall be collected at the same level of the SPT implemented and at every identifiable change of strata to supplement the boring records. Samples shall be stored immediately in air tight jars which shall be filled to capacity as much as possible.

6.4.3.2.2 In designated borrow areas, bulk samples, from a depth of about 0.5 m below ground level shall be collected to establish the required properties for use as a fill material. Disturbed samples weighing about 25 kg (250 N) shall be collected at shallow depths and immediately stored in polythene bags as per BS 5930. The bags shall be sealed properly to preserve the natural moisture content of the sample and placed in wooden boxes for transportation.

6.4.3.3 Undisturbed Samples

In each borehole, undisturbed samples shall be collected at every change of strata and at depths as follows:

Location	Depths (m)

Normal Soils for open cast foundations	1.0, 4.0, 6.0, 8.0, 10.0 m
Pile foundation locations & special locations	1.0, 4.0, 6.0, 8.0,11.0 and thereafter at the rate of 3 m intervals up to 30 m

The spacing between the top levels of undisturbed sampling and standard penetration testing shall not be less than 1.0 m. Undisturbed samples shall be of 100mm diameter and 450mm in length. Samples shall be collected in a manner to preserve the structure and moisture content of the soil Accessories and sampling procedures shall conform to BS 5930.

a) Undisturbed sampling in cohesive soil:

Undisturbed samples in soft to stiff cohesive soils shall be obtained using a thin walled sampler. In order to reduce the wall friction, suitable precautions, such as oiling the surfaces shall be taken.

b) Undisturbed sampling in very loose, saturated, sandy and silky soils and very soft clays:

Samples shall be obtained using a piston sampler consisting of a cylinder and piston system. In soft clays and silky clays, with water standing in the casing pipe, piston sampler shall be used to collect undisturbed samples in the presence of expert supervision.

Accurate measurements of the sampling depth, dimensions of sampler, stroke and length of sample recovery shall be recorded. After the sampler is pushed to the required depth, the cylinder and piston system shall be drawn up together, preventing disturbance and changes in moisture content of the sample.

c) Undisturbed sampling in cohesion less soils

Undisturbed samples in cohesion less soils shall be obtained in accordance with BS 5930. Sampler operated by compressed air shall be used to sample cohesion less soils below ground water table.

6.4.4 Ground Water

One of the following methods shall be adopted for determining the elevation of ground water table in boreholes as per relevant BS standard and the instructions of the Employer:

- In permeable soils, the water level in the borehole shall be allowed to stabilize after depressing it adequately by bailing before recording its level. Stability of sides and bottom of the boreholes shall be ensured at all times.
- For both permeable and impermeable soils, the following method shall be suitable. The borehole shall be filled with water and then bailed out to various depths. Observations on the rise or fall of water level shall be made at each depth. The level at which neither fall nor rise is observed shall be considered the water table elevation and confirmed by three successive readings of water level taken at two hours interval.

If any variation of the ground water level is observed in any specific boreholes, the water level in these boreholes shall be recorded during the course of the filed investigation. Levels in nearby wells, streams, etc., if any, shall also be noted in parallel.

Subsoil Water Samples

- Subsoil water samples shall be collected for performing chemical analysis. Representative ground water samples shall be collected when first encountered in boreholes and before the addition of water to aid boring or drilling.
- Chemical analysis of water samples shall include determination of pH value, turbidity, sulphate and chloride contents, presence of organic matter and suspended solids.

Chemical preservatives may be added to the sample for cases as specified in the test methods.

6.4.5 Vane Shear Test (Required for Boreholes where Undisturbed Sampling is not possible - Only at Special Locations)

Field vane shear test shall be performed inside the borehole to determine the shear strength and bearing capacity of cohesive soils, especially of soft and sensitive clays, which are highly susceptible to sampling disturbance. Equipment, accessories, test procedures, field observations shall correspond to BS 5930. Tests may also be conducted by direct penetration from ground surface. If the cuttings at the test depth in the borehole show any presence of gravel, sand shells, decomposed wood, etc., which is likely to influence the test results substantially, the test at that particular depth may be omitted with the permission of the Employer. However, the test shall be conducted at a depth where these obstructions cease to occur. On completion of the test, the results shall be reported as specified in BS 5930.

6.5 Laboratory Testing

6.5.1 Essential Requirements

6.5.1.1. Depending on the types of substrata encountered, appropriate laboratory tests shall be conducted on soil and rock samples collected in the field. Laboratory tests shall be scheduled and performed by qualified and experienced personnel who are thoroughly conversant with the work. Tests indicated in the schedule of items shall be performed on soil, water and rock samples as per relevant British codes or the equivalent codes approved by the Employer. One copy of all laboratory test data records shall be submitted to Employer. Laboratory tests shall be carried out concurrently with the field investigations as initial laboratory test results could be useful in planning the later stages of field work. A schedule of laboratory tests shall be established by Contractor to the satisfaction of the Employer within one week of completion of the first borehole;

6.5.1.2. Laboratory tests shall be conducted using approved apparatus complying with the requirements and specification of BS 1377 or other approved standards for this type of work. It shall be checked that the apparatus are in good working condition before starting the laboratory tests. Calibration of all the instruments and their accessories shall be done carefully and precisely at an approved laboratory;

6.5.1.3. All samples, whether undisturbed or disturbed shall be extracted, prepared and examined by competent personnel properly trained and experienced in soil sampling. examination, testing and in using the apparatus in conformance with the specified standards;

6.5.1.4. Undisturbed soil samples retained in liners or seamless tube samplers shall be removed, without causing any disturbance to the samples, using suitably designed extruders just prior to actual testing. If the extruder is horizontal, proper support shall be provided to prevent the sample from breaking. For screw tube extruders, the pushing head shall be free from the screw shaft so that no torque is applied to the soil sample in contact with the pushing head. For soft clay samples, the sample tube shall be cut by means of a high speed hacksaw to proper test length and placed over the mould before pushing the sample into it with a suitable piston;

6.5.1.5. While extracting a sample from a liner or tube, care shall be taken to assure that its direction of movement is the same as that during sampling to avoid stress reversal.

6.5.2 Tests

Tests as indicated in these specifications and as may be requested by the Employer, shall be conducted. These tests shall include but may not be limited to the following:

a. Tests of undisturbed and disturbed samples
   - Visual and engineering classification;
   - Sieve analysis and hydrometric analysis;
   - Liquid, plastic and shrinkage limits;
   - Specific gravity.

b. Tests of undisturbed samples:
   - Bulk density and moisture content;
   - Relative density(for sand);
   - Unconfined compression test;
   - Direct shear test or Tri-axial shear tests (depending on the type of soil and field conditions on undisturbed or remoulded samples):
     - Unconsolidated untrained;
     - Consolidated drained test;

c. Chemical analysis of sub soil water.

6.5.3 Salient Test Requirement

Tri-axial shear tests shall be conducted on undisturbed soil samples, saturated by the application of back pressure. Only if the water table is at sufficient depth so that chances of its rising to the base of the footing are small or nil, the tri-axial tests shall be performed on specimens at natural moisture content. Each test shall be carried out on a set of three test specimens from one sample at cell pressures equal to 100, 200 and 300 KPa respectively or as required depending on the soil conditions;

Direct shear test shall be conducted on undisturbed soil samples. The three normal vertical stresses for each test shall be 100, 200 and 300 KPa or as required for the soil conditions.

6.6 Test Level

6.6.1 Level 1

Level 1 geotechnical investigation shall be based on a visual-tactile examination of disturbed soil samples for the determination of both soil classification and strength. Visual-tactile examination shall be undertaken in accordance with the recommendations of ASTM D2488. Samples shall be taken from either trial pits, bore holes, hand held augers, or if specified during course of the foundation excavation.

Where dynamic probing is used in conjunction with a higher level geotechnical investigation technique, the probe shall be calibrated to the satisfaction of the Engineer against the results of the higher level tests. Details of the Contractor's calibration proposals and calibration results shall be submitted to the Engineer. **This is a Hold Point.**

6.6.2 Level 2

6.6.2.1 Level 2 geotechnical investigation shall be based on in-situ testing for the determination of the soil strength and laboratory tests of disturbed samples for the determination of soil classification such as particle size distribution, Atterberg limits. For details of the soil classification reference should be made to **Annex 6-3**.

6.6.2.2 In-situ testing, shall comply with the following requirements:

a. Non-cohesive soil - standard penetration tests (SPTs), cone penetration tests (CPTs), or in the absences of large gravel content pressure meter tests (PMTs);
b. Cohesive soil - As for non-cohesive soils except that use of SPTs is subject to the Engineer's approval. Vane shear tests (VSTS) may also be used in fairly uniform fully saturated soils;
c. Rock - Weak rock SPTs, medium to hard rock PMTs.

6.6.2.3 Where it is proposed to determine the soil classification indirectly from the in-situ tests e.g. CPTs, cross correlation shall be undertaken at specified intervals using auger borings.

6.6.2.4 Laboratory soil classification tests for non-cohesive soils shall be particle size distribution, moisture content and relative density, whilst those for cohesive soils shall be moisture content and Atterberg limits. Whilst strength tests shall be direct shear box (immediate) and bulk density for non-cohesive soils and unconfined compressive strength, direct shear box (immediate) and bulk, density for cohesive soils. All laboratory testing shall be undertaken in accordance with BS 1377.

6.6.2.4 Where appropriate ground water levels shall be recorded in all boreholes.

6.6.3 Level 3

Level 3 geotechnical investigation shall be based on in-situ testing (as for Level 2) for the determination of the soil strength and the recovery of disturbed soil samples for subsequent laboratory testing.

Laboratory soil classification tests for non-cohesive soils shall be particle size distribution, moisture content and relative density, whilst those for cohesive soils shall be moisture content and Atterberg limits. Whilst strength tests shall be direct shear box (immediate) and bulk density for non-cohesive soils and unconfined compressive strength, laboratory vane shear and bulk, density for cohesive soils. All laboratory testing shall be undertaken in accordance with BS 1377.

6.6.4 Level 4

Level 4 geotechnical investigation shall be based on a combination of in-situ testing (as for level 2) and recovery of disturbed/undisturbed soil samples for subsequent laboratory testing.

Laboratory soil classification tests shall be as per Level 3, whilst strength tests shall be direct shear and bulk density for cohesive soils and unconfined compressive strength, laboratory vane shear, tri-axial compression (undrained) as appropriate and bulk density for Non-cohesive soils. All laboratory testing shall be undertaken in accordance with BS 1377.

6.7 Geotechnical Investigation Report

6.7.1 General

6.7.1.1 The Contractor shall submit a formal report containing geological information of the region, procedures adopted for geotechnical investigation, field observations, summarized test data, conclusions and recommendations. The report shall also include detailed bore logs, subsoil sections, field test results, laboratory observations and test results both in tabular as well as graphical form, practical and theoretical considerations for the interpretation of test results, supporting calculations for the conclusions drawn, etc. Initially, the Contractor shall submit three copies of the report in draft form for Employer's review;

6.7.1.2 The Contractor's Geotechnical Engineer shall visit Employer's Corporate/main site Office for a detailed review based on Employer's comments in order to discuss the nature of modifications, if any, to be done in the draft report. The Contractor shall incorporate in the report the agreed modifications. Three copies of the detailed final approved report shall be submitted to Employer together with one set of reproducible of the graphs, tables, etc.;

6.7.1.3 The detailed final report based on field observations, in-situ and laboratory tests shall encompass theoretical as well as practical considerations for foundations for different types of structures.

6.7.2 Data to be furnished

The report shall also include the following:

a. A plot plan/location plan showing the locations and reduced levels of all field test e.g. boreholes, trial pits, static cone penetration tests, dynamic cone penetration tests, etc., property drawn to scale and dimensioned with reference to the established grid lines;
b. A true cross section of all individual boreholes and test pits with reduced levels and coordinates showing the classification and thickness of individual stratum, position of ground water table, various in-situ tests conducted, samples collected at different depths and the rock stratum, if encountered;
c. Geological information of the area including geomorphology, geological structure, etc.
d. Past observations and historical data, if available, for the area or for other areas with similar soil profile, or with similar structures in the surrounding areas;
e. Plot of Standard Penetration Test (uncorrected and corrected N values) with depth for each test site;
f. Results of all laboratory test summarised according to Table 1 (i) for each sample as well as (ii) for each layer, along with all the relevant charts, tables, graphs, figures, supporting calculations;
g. For all triaxial shear tests, stress vs. strain diagrams as well as Mohr's circle envelopes shall be furnished. If back pressure is applied for saturation, the magnitude of the same shall be indicated. The value of modulus of elasticity (E) shall be furnished for all tests along with relevant calculations.

Table 6-1: Summary of Results of Laboratory Tests on Soil and Water Samples

Description	Results
1. Bore hole test pit. no	
2. Depth (m)	
3. Type of sample	
4. Density (kg/m³)	
a) Bulk	
b) Dry	
c) Submerged	
5. Water content (%)	
6. Particle Size (%)	
a) Gravel	
b) Sand	
c) Silt	
d) Clay	
7. Consistency properties	
a) LL	
b) PL	
c) PI	
d) LI	
8. Soil	
a) Classification	
b) Description	
c) Specific gravity	
9. Strength Test	
a) Type	
b) C (Cohesion)	
c) Ø (angle of internal friction)	
d) Angle of repose	
10. Shrinkage limit (%)	
11. Relative Density (%)	
12. Remarks	

Notations:

For type of sample:

- DB - Disturbed bulk soil sample;
- DP - Disturbed SPT soil sample;
- DS - Disturbed samples from cutting edge of undisturbed soil sample.
- RM - Remoulded soil sample;
- UB - Undisturbed block soil sample;
- US - Undisturbed soil sample by sampler;
- W - Water sample.

For strength test:

- SCPT - Static Cone Penetration Test;
- UCC - Unconfined Compression Test;
- VST - Vane Shear Test;
- Tuu - Unconsolidated UndrainedTriaxial Test.
- Note: Replace T by D for Direct Shear Test
- Tod - Consolidation Drained Triaxial Test.

For others:

- LL - Liquid Limit (%);
- PL - Plastic Limit;
- PI - Plasticity Index;
- LI - Liquidity Index;
- C - Cohesion (kPa);
- Ø - Angle of Internal Friction (degrees);
- S-Pr. - Swelling Pressure (kPa);
- e_0 - Initial Void Ratio;
- P_c - Reconsolidation Pressure (kPa);
- C_c - Compression Index;
- DP - Change in Pressure (kPa);
- m_v - Coefficient of Volume Compressibility (m^2/KN);
- C_v - Coefficient of Consolidation (m^2/hr).

For chemical test:

- As per specifications - see clause 6.7.4.

6.7.3 Recommendations

Recommendations shall be provided for each tower location duly considering soil type and tower spotting data. The recommendations shall provide all design parameters and considerations required for proper selection, dimensioning and future performance of tower foundations and the following:

a. The subsurface material must provide safe bearing capacity and uplift resistance by incorporating appropriate safety factors thereby avoiding rupture under ultimate loads;

b. Movement of the foundation, including short and long term components under transient and permanent loading, shall be strictly controlled with regard to settlement, uplift, lateral translation and rotation:

c. Core resistance, frictional resistance total resistance, relation between core resistance, standard penetration test N value.

d. For shallow foundation the following shall be indicated with comprehensive supporting calculations:

e. Net safe allowable bearing pressure for isolated square footing of sizes 4.0, 5.0, 6.0 & 7.0 m at three different founding depths of 2 and 3 & 3.5 m below ground level considering both shear failure and settlement criteria giving reasons for type of shear failure adopted in the calculation.
   - Net safe allowable bearing pressure for raft foundations of widths greater than 5m at 2.0, 3.0 and 4.0 m below ground level considering both shear failure and settlement criteria.
   - Rate and magnitude of settlement expected of the structure.
   - Net safe bearing capacity for foundation sizes mentioned in para(i) above, modulus of sub grade reaction, modules of elasticity from plate load test results along with time settlement curves and load settlement curve in both natural and log graph, variation of Modulus of sub grade reaction with size, shape and depth of foundation.

f. The stable slopes for shallow and deep excavations, active and passive earth pressure at rest and angle of repose for sandy soils shall be furnished. The loading of the foundations shall not compromise the stability of the surrounding subsurface materials and the stability of the foundation shall be ensured against sliding or overturning;

g. Depending on the subsurface material, water table level and tower type, either reinforced concrete isolated pad and chimney, cast-in-situ bored pile of special foundations shall be installed at a given location;

h. Net Safe allowable bearing pressure and uplift resistance shall be provided for the various sizes of isolated square footings founded at various depths below ground level considering both shear failure and movement criteria; rate and magnitude of movement expected of the structure (settlement, uplift, rotation) shall also be given;

i. In cases where normal open cast/pile foundations appear to be impractical, special pile foundations shall be given due consideration along with the following:
   - Type of pile foundation and reasons for recommending the same duly considering the soil characteristics;
   - Suitable founding strata for the pile;
   - Estimated length of pile for 500, 750, 1000 KN and 4500 KN capacities end bearing and frictional resistance shall be indicated separately;
   - Magnitude of negative skin friction or uplift forces due to soil swelling.

j. Where the subsoil water and soil properties are found to be chemically aggressive. The Contractor shall take suitable precautions during construction including any protective coating to be applied on the foundations; susceptibility of soil to termite action and remedial measures for the same shall be dealt with;

k. Suitability of locally available soils at site for filling, backfilling and adequate compaction shall be investigated;

l. If expansive soil such as black cotton soil is encountered recommendation of removal or retainment of the same shall be given in the latter case, detailed specifications of special requirements shall also be given;

m. Susceptibility of subsoil strata to liquefaction in the event of earthquake and remedial measures, if required, shall be considered;

n. Any other information of special significance such as dewatering schemes, etc. which may have a bearing on the design and construction shall be provided;

o. Recommendations for additional soil investigations, beyond the scope of the present work, shall be given if Contractor considers such investigations necessary.

6.7.4 Hydro-geological Conditions

The maximum elevation of ground water table, amplitudes of its fluctuations and data on water aggressively with regard to foundation structure materials shall be reported. While preparing ground water characteristics the following parameters should be specified for each aquifer:

a. bicarbonate alkalinity, mg-eq/(deg.);
b. pH value;

c. content of aggressive carbon dioxide, mg/l;
d. content of magnesia salts. mg/l, recalculated in terms of ions, Mg+2;
e. content of ammonia salts, mg/l, recalculated in terms of ions, NH4+;
f. content of caustic alkalis, mg/l, recalculated in terms of ions, Na+ and K+;
g. contents of chlorides, mg/l recalculated in terms of ions,Cl-;
h. contents of sulphates, mg/l, recalculated in terms of ions, SO4-2;
i. aggregate content of chlorides, sulphates, nitrates, carbonates and other salts, mg/l.

6.8 Morphological Study of Rivers

Morphological study should be conducted for the rivers which are crossed by transmission line or the rivers that run parallel/close to transmission line. The study shall be carried out by a specialist firm/person appointed by the Contractor in consultation with the Employer's Engineer. Duely sealed and signed study report shall be submitted by the Contractor for Employer's review and approval.

The study report shall include the following:

a. Geological information of the study area including geomorphology, geological structure.
b. Observations and data regarding historical channel and bank line movement for the river/ change of course of river;
c. Prediction about possible future development of the river.
d. Design discharge, maximum velocity, scour depths, slit factor, etc., and history of flood details for mid-stream and river bank locations.
e. Study area should cover at least 2 km in upstream and 2 km in downstream from the proposed transmission line.
f. Reduced level (RL) of existing ground, highest water level and maximum scour depth for every tower location should be mentioned with respect to Mean Sea Level (MSL).
g. Any other relevant data if necessary for design and execution of tower foundation should be included in the study report.
h. Past observations and historical data, if available, for the area or for other areas with similar soil profile, or with similar structures in the surrounding areas.

6.9 Rates and Measurements

6.9.1 Rates

The Contractor's quoted rates shall be inclusive of making observations, establishing the ground level and coordinates at the location of each borehole, test pit etc. No extra payments shall be made for standard penetration test, collecting, packing, transporting of all samples and cores, recording and submittal of results on approved formats and conducting morphological study of rivers.

6.10 Field Quality Plan

A standard field quality plan is given in **Annex 3-5** of this document as a minimum requirement. Bidders are requested to convey their acceptance of the same along with their offer.

6.11 Foundation Setting Level Diagrams

Where specified foundation setting level diagrams shall be prepared for specific tower positions. At a scale of 1:200 (horizontally and vertically) the foundation excavation and setting levels on the two diagonals (drawn separately) shall be shown, together with a record of the applicable foundation design, leg and body extensions and tower centre-pegcoordinates.

Annex 6-1: Crossing of Obstacles

Annex 6-1(1): Basic External Clearance

The minimum clearances defined below shall not be infringed at the specified maximum operating temperature of the phase conductor with the suspension insulators hanging vertically or deflected to any angle up to 70° from the vertical.

Nominal system voltage	**(kV)**	**132**		**230**		**400**	
	Conductor	**ACSR/ AAAC**	**ACCC**	**ACSR/ AAAC**	**ACCC**	**ACSR/ AAAC**	**ACCC**
Maximum conductor temperature	(°C)	80	180	80	180	80	180
Maximum earthwire/OPGW temperature	(°C)	50	50	50	50	50	50

Description of Clearance - Minimum Clearance

Description	**Unit**	**132kV**	**230kV**	**400kV**
Ground (see note d)	(m)	7.0	8.0	9.0
Roads	(m)	8.0	9.0	14.0
Buildings, structures, walls or other objects on which a person can stand or against which he can lean a ladder (see note b)	(m)	5.0	7.0	8.0
Trees (see note c)	(m)	3.5	5.5	6.5
Shrubs	(m)	3.0	5.5	6.5
Railways (measured from railway track)	(m)	15.6	18.26	18.5
River Crossing	(m)	23.0	25.0	26.0

Notes:

a. Clearances are measured to the nearest projection of an object.

b. These clearances also apply to earthed metalclad buildings.

c. Clearances applicable to trees under the transmission line and to trees adjacent to the line. Clearances also applicable to trees falling, towards the line with conductors hanging in a vertical plane.

d. The clearance shall be measured from the highest flood level or from the ground level whichever is higher.

Annex 6-1(2): Clearance from Electric Lines

Where a transmission line crosses above or below another transmission line, the following clearances shall be obtained.

In still air, and with the phase conductor temperature of the lower transmission line at 5°C whilst the assumed phase conductor temperature of the higher transmission line is at its maximum operating temperature, the following minimum clearances between the lowest conductor (phase or earth) of the higher transmission line and the highest conductor (phase or earth) of the lower line are applicable:

Sl. No.	Nominal System Voltage	132kV	230kV	400kV
1.	132 kV	4	5.5	7
2.	230 kV	5.5	5.5	7
3.	400 kV	7	7	9

Notes:

i) The voltage specified is that for which transmission lines are ultimately designed to operate.

ii) Clearances are determined by the ultimate voltage of either the upper or lower transmission line, whichever is the greater.

iii) Clearances are determined by the ultimate voltage of the upper/lower transmission line.

In addition to the above at the point of crossing, the clearance in (a) shall be obtained assuming the conductors of the lower transmission may swing up to 45° from the vertical.

Crossings of power supply and communication circuits shall not be at angle to the normal greater than 45 degrees without previous agreement of the Engineer.

Annex 6-1(3): Crossing of Pipelines

Pipeline crossings shall not be at angle to the normal greater than 20 degrees.

Annex 6-2: Geotechnical Investigation

Geotechnical Investigation Level - Frequency

Level 2 Every tower site excluding river crossing and anchor towers and rigid frame tower.

Level 4 At river crossing, anchor towers and rigid frame tower.

Ground water samples shall be taken at every tension tower and all river crossing, anchor tower positions for chemical analysis.

Annex 6-3: Soil Classification by United Soil Classification System

Major Divisions (1)	Subdivisions (2)	USCS Symbol (3)	Typical names (4)	Laboratory classification criteria (5)	
Coarse-grained soils (more than 50% retained on no. 200 sieve)	Gravels (more than 50% of coarse fraction retained on no.4 sieve)	GW	Well-graded gravels or gravel-sand mixtures, little or no fines.	Less than 5% fines.	CU≥4 and 1≤ CC≤3
		GP	Poorly graded gravels or gravelly sands, little or no fines.	Less than 5% fines.	Does not meet CU and/or CC criteria listed above.
		GM	Silty gravels, gravel-sand-clay mixtures.	Less than 12% fines.	Minus No. 40 soil plots below the A-line.
		GC	Clayey gravels, gravel-sand-clay mixtures.	Less than 12% fines.	Minus No. 40 soil plots on or above the A-line.
	Sands (50% or more of coarse fraction passesno.4 sieve)	SW	Well-graded sands or gravelly sands, little or no fines.	Less than 5% fines.	CC ≥6 and 1≤ CC ≤3.
		SP	Poorly graded sands or gravelly sands, little or no fines.	Less than 5% fines.	Does not meet CU and/or CC criteria listed above.
		SM	Silty sands, sand-silt mixtures.	Less than 12% fines.	Minus No. 40 soil plots below the A-line.
		SC	Clayey sands, sand-clay mixtures.	Less than 12% fines.	Minus No. 40 soil plots on or above the A-line.
Fine-grained soils (50% or more passes the no. 200 sieve)	Silts and clays (liquid limit less than 50)	ML	Inorganic silts, rock flour, silts of low plasticity	Inorganic soil	PI＜4 or plots below A-line
		CL	Inorganic clays of low plasticity, gravelly clays, sandy clays, etc.	Inorganic soil	PI＞7and plots on or above A-line
		OL	Organic silts and organic clays of low plasticity	Organic soil	LL (oven dried)/LL (not dried)＜0.75
	Silts and clays (liquid limit 50 or more)	MH	Inorganic silts, micaceous silts, silts of high plasticity	Inorganic soil	Plots below A-line
		CH	Inorganic highly plastic clays, fat clays, silty clays, etc.	Inorganic soil	Plots on or above A-line
		OH	Organic silts and organic clays of high plasticity	Organic soil	LL(oven dried)/LL(not dried)＜0.75
Peat	Highly organic	PT	Peat and other highly organic soils	Primarily organic matter, dark in colour, and organic odour	

** If 4≤ PI≤7 and PI plots above A-line, then dual symbols (e.g. CL-ML) are required.

Annex 6-4: Engineering Documents to be Submitted by the Contractor

Clause Reference	Document Description	Comment
6.2.6	Route map, Mouza map and profile drawings	
6.3.1	Slope stability analysis	if specified
6.6.1	Dynamic probe	calibration details
6.7	Geotechnical investigation	test results

Annex 6-5: Notification and Hold Points

Clause Reference	Notification Points	Hold Points
6.1		Survey
6.2.6		Route maps, Mouza maps and profile drawings
6.3		Geotechnical investigation
6.6.1		Dynamic probe calibration
6.6.1		Level 1

Annex 6-6: Reference Standards

The reference standards and other documents referred to in this Section of the Specification are listed below:

BS 1377: Method of tests for soils civil engineering purposes

BS 5930: Code of practice for site investigation

ASTM D2488: Standard recommended practice for description of soil visual manual procedure

7. Foundations

7.1 7.1 SCOPE

7.1.1 General

The type of foundation to be used at each tower position shall be determined from the results of the geotechnical investigation. The design of the foundation shall be in accordance with the design parameters and associated criteria detailed in this Specification for tender design purposes, but finally in accordance with the parameters of the actual geotechnical investigation.

The Contractor shall ascertain from the geotechnical investigation that the ground conditions are suitable for each foundation. The levels of geotechnical investigation specified are the minimum level required at site. The Contractor shall undertake all necessary geotechnical investigation for the foundation design. Any subsidence or failure, due in the opinion of the Engineer to insufficient care having been taken in either the geotechnical investigation, or installation of the foundations shall be the Contractor's responsibility.

In areas where subsidence is likely to occur the Contractor shall if necessary, carry out modifications to the tower foundations as agreed by the Engineer. Collar or tie beams between the individual footings of a tower shall not be used unless specifically authorized by the Engineer. The Contractor shall not be held responsible for failure of tower and foundations arising from adjacent mineral extraction subsequent to the construction of the transmission line. The Contractor shall, however, be held liable for any lack of foundation or tower stability due to causes other than subsidence due to subsequent mineral extraction.

The Contractor is responsible for obtaining approval from the Engineer and where appropriate statutory regulatory bodies for the type and design of the foundations installed. It should be noted as a general requirement that no site work can commence before such approvals have been obtained. **This is a Hold Point.**

7.1.1.1 The work to be performed under this specification consists of excavation and/or boring in all kinds of soil including weathered rock, fissured rock, hard rock, shale etc., providing and installation of open cast RCC foundation and/or cast-in-situ RCC vertical bored piles of specific diameter, providing all labour, materials, supervision, dewatering, scaffolding, platforms, boring and construction equipments & machineries, tools, tackles and plants, supplies, power, fuel, transportation on land and water, all incidental items not shown or specified but reasonably implied or necessary for successful and timely completion of work including Contractor's supervision in strict accordance with BS 8110 & BS 8004, drawings and specifications. The nature of work shall generally involve construction/installation of open cast foundation and/or cast-in-situ RCC vertical bored piles of specified diameter, pile caps, pedestals, tie beam (if required) etc. as per the Employer’s construction drawings and also co-ordination with tower erection contractor for setting of stubs / fixing of anchor bolts (as the case may be).

7.1.1.2 The setting of stub/fixing of foundation anchor bolts (as indicated in the drawing) shall be the responsibility of the Contractor.

7.1.1.3 The Bidder shall quote based on the provisional Bill of Quantities (BOQ) furnished in the Bid Proposal Sheet (B.P.S). No deviation in this respect will be acceptable and any bid quoted based on different Bill of Quantities shall be liable for rejection. However, the payment will be made as per actual quantity executed as per Employer/Employer’s design & drawing based on the unit rates for items quoted.

7.1.2 Method Statement

The Contractor shall submit to the Engineer a comprehensive method statement giving sequential details of his proposed installation method and include his intended programme. The method statement shall include but not be limited to the following details:

(a) method of excavation. (for all types of foundations) and dealing with water;
(b) method of installation of the pile foundations;
(c) method of installation of rigid frame / river crossing tower foundations,
(d) methods for heating, welding and site bending of reinforcement;
(e) method of placing of concrete;
(f) method of curing and protecting the concrete;
(g) method of backfilling and compacting;
(h) Reinstatement of working areas;
(i) Quality Control procedures;
(j) Site safety procedures.

This is a Hold Point.

7.1.3 Foundation Types and Uses

The foundation shall be of open cast type and / or cast in situ piles. Plain Cement Concrete/Reinforced Cement Concrete footing shall be used for all type of normal towers. All the four footings of the tower and their extensions shall be similar for a particular location, except where soil condition and or water table are different at different legs. The minimum depth of foundation, below ground level shall generally be 3.0 meters. For Hard Rock type and also where specific site conditions / properties demand foundation of different depths (lower or higher), the same shall be adopted. Further, for multi circuit tower foundations, foundation depth shall be 3.5 meters and for river crossing open cast foundations, the foundation depth shall be more than 3.5 meters.

Foundations for towers for different categories of soil conditions shall be selected from the approved types detailed in Appendix 7.A1.

Reinforced concrete pile caps shall be used for all types of piles.

Unless specified to the contrary, foundations for angle/terminal towers shall not have different designs for compression and tension footings, but shall be satisfactory for the most adverse condition of maximum and minimum angles of deviation/entry and with the wind blowing from the most onerous direction.

7.1.4 Classification of Foundations

7.1.4.1 Concrete Pad & Chimney Foundations

This foundation takes the form of a reinforced concrete flat slab surmounted by a chimney. Alternatively, the slab may be replaced by a truncated concrete pyramid surmounted by a chimney.

The foundation designs shall depend upon the type of soil, sub soil water level and the presence of surface water which have been classified as follows (except pile foundations).

7.1.4.1.1 Normal dry

To be used for locations where normal dry cohesive or non-cohesive soils are met. Foundations in areas where temporary surface water encountered from rain runoff or agricultural fields (except paddy fields) shall also be classified as normal dry.

7.1.4.1.2 Sandy Dry Soil

To be used for locations where cohesion less pure sand or sand with clay content less than 10% met in dry condition.

7.1.4.1.3 Wet

To be used for locations:

a) Where sub-soil water is met between 1.5 meters and the depth of foundation below the ground level.

b) Which are in surface water for long period with water penetration not exceeding one meter below the ground level e.g. paddy fields.

7.1.4.1.4 Partially Submerged

To be used at locations where sub-soil water table is met between 0.75 meter and 1.5 metre below the ground level.

7.1.4.1.5 Fully Submerged

To be used at locations where sub-soil water table is met at less than 0.75 meter below the ground level.

7.1.4.1.6 Black Cotton Soil

To be used at locations where soil is clayey type, not necessarily black in colour, which shrinks when dry and swells when wet, resulting in differential movement. For designing foundations, for such locations, the soil is considered submerged in nature.

7.1.4.1.7 Fissured – Rock

To be used at locations where decomposed or fissured rock, hard gravel, kankar, limestone, laterite or any other soil of similar nature is met. Under cut type foundation is to be used for fissured rock locations.

In case of fissured rock locations, where water table is met at 1.5M or more below ground level, wet fissured rock foundations shall be adopted. Where fissured rock is encountered with subsoil water table less than 0.75 meter below ground level, submerged fissured rock foundations shall be adopted. In case of dry locations dry fissured rock foundations shall be adopted.

7.1.4.1.8 Hard Rock

The locations where chiseling, drilling and blasting is required for excavation, Hard rock type foundations are to be used. For these locations rock anchoring is to be provided to resist uplift forces.

7.1.4.1.9 Where soil is of composite in nature, classification of foundation shall be according to the type of soil predominant in the footing.

7.1.4.2 Piled Foundations (Deep Foundation)

Piled shaft foundations shall comprise piles suitably connected below ground level by a concrete cap. The Contractor shall submit his proposed method of installation and Quality Control procedures to the Engineer prior to start of piling works, a detailed description of the equipment, materials and procedures that will be used for the piling work. The description shall include equipment specifications, including catalogue data, manufacturer's published specifications, loading capacities, protective devices and test apparatus; detailed installation procedures test procedures, as well as references concerning previously completed piling work. **This is a Hold Point.**

7.1.4.2.1 Piled **foundations shall comprise either:**

(a) Multiple Piled Foundations Using Raked Piles

The pile loads shall be determined by the vector summation of the horizontal and vertical components of the total reactions at ground level. One multiple pile foundation shall be constructed for each leg, and since the pile group provides all the lateral stability, no interconnecting ground beam between the legs are required. Raked piles are not to be used where ground settlement is likely to impose unacceptable bending stresses in the piles.

(b) Multiple Piled Foundations Using Vertical Piles

This type of foundation shall be used when ground settlement is likely to impose unacceptable bending stresses on raked piles, or where the type of pile cannot be installed raked. In this case lateral stability shall be provided by the passive resistance of the ground acting on the piles, pile cap and their interconnecting ground beams where present. In addition to the loading derived from the tower, ground beams where appropriate shall be designed to accept a specified wheel load.

Ultimate uplift resistance shall be obtained assuming the actual weight of piles, pile caps etc. plus the guaranteed ultimate uplift resistance of the piles. Allowance shall be made for buoyancy effects. The minimum component of the uplift resistance provided by the dead submerged weight of the piles and pile caps should not be less than the value specified in **Appendix 7.A4**.

Ultimate compressive loads shall include the superimposed weight of soil; pile caps (and tie beams, etc.) multiplied by the dead load factor (as per **Appendix 7.A2**) and shall be obtained by the guaranteed ultimate resistance of the piles.

7.1.4.3 Raft Foundations

Raft foundations for wide based lattice towers shall only be used in areas subject to mining settlement, or very poor ground where piling is not possible.

7.1.4.4 Raised Chimney

Chimney of foundation may be raised at high water level area to keep the steel part of the tower away from water. The top of concrete chimney of the foundation shall be at least 450mm above the highest flood level.

The contractor shall confirm the water level and adjust the foundation setting level to meet the requirement. Such foundation site shall be dewatered by pumping or other approved means during excavation, all other necessary arrangements to perform the foundation work in water-logged condition, concrete works and backfilling works. Those costs shall be deemed to be considered in the Contractor's expense.

If raised chimney is required at any location, stubs required for that raised chimney will have to designed by the contractor subject to approval by the Employer. Such costs shall be deemed to be included in the contract price.

Depending on the highest flood level, raised chimney may vary from 1m to 6m in one meter increment. The Contractor shall submit his proposed method of installation and Q.C. procedures to the Engineer prior to commencing his design. This is a **Hold Point.**

7.1.4.5 Rigid Frame Foundation

Rigid framed foundation, which is adopted at high water level area, shall be consisted of rigid frame and pile.

As for foundation design, foundation shall be designed as a rigid frame to withstand against uplift load, compression load and horizontal load. The Contractor will consider friction between pile and soil against uplift load and against compression load, displacement of pile against horizontal load respectively. Individual footings shall be interconnected by tie beams, which shall be adequate to resist lateral forces and hydrostatic pressure exerted by the flood water. Allowances shall be made in the foundation design for hydrostatic pressure and the effects of seasonal rains, and scour.

In flooding area, the top of chimney concrete of the foundation shall be above the highest flood level. The Contractor shall confirm the water level and adjust the foundation setting level to meet the requirement. Such foundation site shall be dewatered by pumping or other approved means during excavation all other necessary arrangements to perform the foundation work in water logged condition, concrete works and backfilling works. Those costs shall be deemed to be considered in the Contractor's rates.

Depending on the water height, rigid frame foundation may vary from 2m to 6m. The Contractor shall submit his proposed method of installation and Q.C. procedures to the Engineer prior to commencing his design. **This is a Hold Point.**

7.1.4.6 River Crossing Foundations

The location of both river crossing tower and anchor tower should be finalized based on hydro and geo-morphological study of the river. Foundations of both river crossing tower and anchor tower shall be treated as foundations on midstream of river. If any other type of tower/towers is/are require to be spotted near/parallel to any river, then base on morphological study foundation of those tower/towers shall be treated same as described above.

Foundation of these types of tower shall be pile supported. The pile shall be designed considering an unsupported height equal to depth of river bed plus allowance for scour depth. If permanent casing is reuired for pile casting upto any depth, the contractor shall considered its cost within the quoted price. Lacey's formula may be applicable for calculating scour depth. All required data to calculate the scour depth shall be collected and managed by bidder themselves. Skin friction for unsupported height shall be considered zero in calculating the pile capacity in this regard.

Top of chimney of this type of tower shall be at least 450mm above highest flood level. The Contractor has to assess the river erosion and has to perform the foundation works within the quoted price even if the tower location found under water during execution stage.

7.2 DESIGN

7.2.1 General

7.2.1.1 Foundation design shall be done by the Contractor as on the basis of reactions given in the Appendix 8.13 and the criteria mentioned in this section.

During foundation design, the obtained reactions shall be multiplied by the strength factors indicated in **Appendix 7.A2**, and the resultant reactions shall be used for foundation design.

7.2.1.2 Depending on the site conditions other types of foundations shall also be designed and provided by the Employer suitable for Intermediate conditions under the above classifications to effect more economy or to suit specific site conditions encountered.

7.2.1.3 The proposal for these types of foundations shall be submitted by the Contractor based on the detailed soil investigation and duly recommended by Engineer-in-charge.

7.2.1.4 The construction drawings /working drawings of all type of foundations classified as in clause 7.1.4 shall be provided to the contractor progressively during execution stage. The drawings for other foundations designed for specific site conditions shall be provided based on actual site requirements only.

7.2.2 Geotechnical Parameters

The geotechnical parameters for tendering purposes are provided in **Appendix 7.A4**. The Contractor shall however perform the geotechnical investigation during execution of the contract at each location as specified in this bidding document. Foundation designs of different towers locations shall be based on the results of geotechnical investigation done by the Contractor. No extra payment will be made if the actual soil condition is found to be worse than the soil parameter given in **Appendix 7.A4**.

7.2.3 Foundation Structural Design Parameters

Foundation structural design parameters for concrete shall be based upon the recommendations of BS 8110, except otherwise defined in this Specification. For structural design of cast in situ piles, guidelines provided in **Appendix 7.A5** should be followed.

7.2.4 Stubs

7.2.4.1 Reference shall be taken from 'Tower' Section.

7.2.4.3 In addition to stubs of normal length, short stubs may be used, provided that provision is made for the attachment of bolted cleats.

7.2.4.4 Cleats shall be capable of transferring 100 percent of the design uplift working load (not factored load) and 50 percent of the design compression working load (not factored load) for shearing and bonding resistance.

7.2.5 Holding Down Bolts (Not Used)

7.2.6 Concrete Chimneys

7.2.6.1 Reinforced concrete chimneys shall be designed to withstand the maximum resultant horizontal residual shear component, with due allowance given where appropriate to resultant lateral (passive) earth pressure of the backfill (assumed to increase linearly with depth).

7.2.6.2 No allowance shall be made of the nominal strength of concrete in tension and the stub shall not be considered as providing any part of the tensile area of reinforcing steelwork.

7.2.6.3 The top of chimney of tower foundation shall be as per **Appendix 7.A8** to this Section.

7.2.6.4 Foundations for lattice steel tower legs with high hillside shear force, due to certain combinations of unequal leg extensions may however differ from those designed for level ground by the addition of extra reinforcement in the chimney.

7.2.7 Concrete Mix Design

7.2.3.1 The Contractor shall be entirely responsible for the control of the quality of concrete mixed and placed, in the Works. Before the commencement of any concrete work, the Contractor shall submit to the Engineer, a complete specification giving details of the materials used, source of supply, storage and quality control requirements, including preliminary trial mixes and works' tests reports. This is a Hold Point.

7.2.3.2 To ensure the durability of the concrete, the requirements specified in Appendix 7.A6 shall be adhered to with regard to characteristic strength, minimum cement content and maximum free water/cement ratio.

7.2.3.3 Admixture should not be used in concrete mix design.

7.2.8 Concrete Cover

7.2.8.1 All structural steelwork and reinforcing including links and stirrups below ground level shall be completely encased in concrete to ensure a minimum cover as specified in **Appendix 7.A7**. Such cover shall exist from the point of entry into the concrete base to either 450 mm above final ground level, or to the top of the concrete leg extension.

7.2.8.2 All foundation concrete to a point 450 mm above final ground level shall be undertaken at the same time and using the same design mix as the main part of the foundation.

7.2.9 Stability Analysis

7.2.10.1 All foundations on slopes greater than 1:4 shall be checked for stability against rotation where appropriate. Due consideration shall be given to the increased upslope lateral loading of the soil and the decrease in downhill resistance provided by the soil, when compared to foundations installed on level ground.

7.2.10.2 Due consideration shall also be taken of any decrease in the uplift resistance of the foundation. Where appropriate, decrease in soil bearing resistance shall also be considered.

7.2.10.3 Where required by the Engineer the overall long-term stability of the slope, including any proposed slope modifications for constructional purposes e.g. benching shall be considered by an approved geotechnical consultant appointed by the Contractor.

7.2.10 Installation Criteria

The Contractor shall prepare a schedule for construction purposes which clearly indicates the soil class and type of foundation to be installed at each tower site. The schedule shall show the basis for selection, taking into account the following items:

a. The results of the geotechnical investigation;
b. The results of any foundation design test;
c. The design criteria;
d. The results of any stability analysis;
e. The occurrence of stagnant water at tower location;
f. Those areas which due to the aggressiveness of the sub-soil or sub-soil water a greater mass of cement per cubic meter of concrete than that specified is required.

The schedule shall be submitted to the Engineer, prior to any foundation installation commencing.

The Contractor must have the facilities to carry on construction of foundation work during rainy season and if the tower is placed at water clogged area. The Contractor is advised to assess the route of the transmission line prior to bidding. Neither time extension nor costs compensation shall be provided in this regard.

This is a Hold Point.

7.2.11 Design Submission

The Contractor shall submit the followings to the Engineer:

a. Signed foundation design calculations along with all soft (software) copies;
b. Foundation general arrangement drawing,
c. Slope stability analysis;
d. Bar bending schedule (information only) - if appropriate;
e. Foundation formwork drawings (information only) - if appropriate;
f. Foundation setting template.

This is a Hold Point.

7.3 CONSTRUCTION OF TOWER FOUNDATION, STUB SETTING AND EARTHING

7.3.1 Open cast foundation

7.3.1.1 Excavation

7.3.1.1.1 The excavation work for foundations shall be taken up by the contractor progressively stretch wise / section wise after obtaining approval from Employer the proposed stretch wise / section wise tower schedule, profile etc. as per detailed survey along the approved route alignment.

7.3.1.1.2 Except as specifically otherwise provided, all excavation for footings shall be made to the lines and grades of the foundations. The excavation wall shall be vertical and the pit dimensions shall be based on an assumed clearance of 150mm on all sides of the foundation pad. For footings with undercut, care shall be taken to carry out excavation as per drawing without any side clearance. All excavation shall be protected so as to maintain a clean sub grade and provide worker safety until the footing is placed, using timbering, shoring, shuttering, dewatering etc. as approved by the Employer. Contractor shall especially avoid disturbing the bearing surface of the pad. Any sand, mud, silt or other undesirable materials which may accumulate in the excavated pit or borehole shall be removed by Contractor before placing concrete.

7.3.1.1.3 The soil to be excavated for tower foundations shall be classified as follows depending upon the physical state of the soil at the time of excavation irrespective of the type of foundation installed.

a) Dry Soil

Soil removable either manually, by means of a spade and shovel or mechanically by proclaims, excavators etc.

Excavation done in dry soil for wet, partially submerged, fully submerged and wet black cotton type of foundations shall also be covered under this

b) Wet Soil

Where the subsoil water table is encountered within the range of foundation depth or land where pumping or bailing out of water is required due to presence of surface water shall be treated as wet soil. The excavation done in wet soil in case of wet, partially submerged, fully submerged and wet black cotton type of foundation shall also be covered under this .

c) Dry Fissured Rock

Limestone, laterite, hard conglomerate or other soft or fissured rock in dry condition which can be quarried or split with crowbars, wedges, pickaxes etc. However, if required, light blasting may be resorted to for loosening the material but this will not in any way entitle the material to be classified as hard rock.

d) Wet Fissured Rock

Above fissured rock, when encountered with subsoil water within the range of foundation depth or land where pumping or bailing out of water is required, shall be treated as wet fissured rock.

e) Hard Rock

Any rock excavation, other than specified under fissured rock above, for which blasting, drilling, chiseling are required. The unit rate quoted for hard rock excavation shall be inclusive of all costs for such drilling (including drilling required for anchoring), chiseling and blasting, etc.

7.3.1.1.4 No extra payment shall be admitted for the removal of fallen earth into a pit or borehole once excavated.

7.3.1.1.5 Where rock is encountered, the holes for tower footings shall preferably be drilled. Blasting where resorted to as an economy measure, shall be done with utmost care to minimise fracturing rock and using extra concrete for filling the blasted area. All necessary precautions for handling and use of blasting materials shall be taken. In cases where unnecessarily large quantities are excavated/blasted, resulting in placement of large volumes of concrete, payment of concrete shall be limited to design volumes of excavation, concreting, reinforcement etc. In case where drilling is done, the stubs may be shortened suitably with the approval of the Employer.

7.3.1.1.6 The Contractor shall arrange & supply requisite blasting material, and be responsible for its storage and use, without any extra cost to the Employer.

7.3.1.1.7 Local rules and regulations shall be followed regarding safety of excavation work.

7.3.2 Construction of Bored Cast In-Situ Pile foundation

7.3.2.1 General Requirement

7.3.2.1.1 ***The specification covers the technical requirements for piling work, general description of work, quality and workmanship. In every case, work shall be carried out to the satisfaction of the Employer in accordance with the Technical Specifications and conform to location, lines, grades and cross sections shown on the construction drawing or as directed by the Employer. The specifications are not, however, intended to cover all the minute details and the work shall be executed according to the specified Britsh Codes. In absence of the BS Codes, work shall be executed according to the best prevailing local Public Works Department practice or to the recommendations of the relevant International Standards or to the instructions of the Employer. This specification shall have precedence in case anything contrary to this is stated anywhere in this Bid Document. In case of conflict between the Specification and Codes, the former shall prevail.***

7.3.2.1.2 ***The work shall include mobilization of all necessary equipments, providing necessary engineering supervision through qualified and technical personnel, skilled and unskilled labour, etc. as required to carry out the complete piling work. The minimum capacities of some key equipment are listed below. However, bidder has to furnish information regarding the equipments they intend to deploy for the project as per Performa stipulated in the relevant schedules of the BPS.***

Sl. No.	Description	Capacity
1.	Tripod height	6m. to 10m. (clear drop)
2.	Rig (winch) capacity	3 T to 5T
3.	Weight of chisel	2T to 3T
4.	Mud pump capacity	15 HP to 25 HP

5.	Dia. of outlet pipe for bentonite	2.5 inch

Note: Contractor may have to provide higher capacity equipments than mentioned above, as per the actual requirement for the execution of the job, without any additional financial implication to the Employer.

7.3.2.2 Site Preparation

This section of the specification covers site preparation of the areas as indicated in the drawings.

7.3.2.3 Reference Points and Bench Marks

7.3.2.3.1 **Permanent reference pillars have been established and under no circumstances shall the Contractor remove or disturb any permanent mark without the approval of the Employer. The Contractor shall carefully maintain and protect all bench marks and reference points and shall layout all his work by accurate reference thereto. The Contractor shall remove all vegetation, excluding trees, from the site areas as directed by the Employer.**

7.3.2.3.2 **The area shall be stripped to remove roots of grass, rubbish and slush, shrubs or other organic materials. Spoiled materials shall be burnt or removed to approved disposal areas on or near the job site as directed by the Employer.**

7.4 MATERIALS

7.4.1 Concrete

All works shall further be carried out in full compliance with all local rules and regulations and the specification. All materials used in the production of concrete, including all admixtures shall be in accordance with the requirements of BS 8500 and BS EN 206.

Cement shall be either:

(a) Ordinary Portland Cement (CEM I) in accordance with BS 12 & BS/BDS EN 197-1 strength grade 42.5N;

(b) Portland Composite Cement (CEM II) in accordance with BS/BDS EN 197-1 strength grade 42.5N;

(c) Sulphate resisting Portland cement in accordance with BS 4027 strength grade 42.5N LA;

The maximum particle size of the aggregates shall be so chosen as to be compatible with mixing, handling, placing, and workability of the concrete.

Throughout the construction period the quality of concrete mixed at and/or delivered to Site has to be controlled. Tests shall be carried out in the presence of the Engineer or under the supervision of an approved office for testing of such kind of works. The Contractor shall submit to the Engineer, test schedules on the following test at least one month prior to commencement.

(a) Aggregates
(b) Cement
(c) Water
(d) Admixtures and Additives

In case of placing ready mixed concrete, concrete tests can be replaced by the manufacturer's test results.

Concreting for pile foundation shall be done through tremie-pipes or equivalent devices to prevent segregation. For concreting in hot weather, ACI Standard 305R "Hot Weather Concreting" shall be followed and various means may be employed to lower the temperature of concrete such as:

- Cooling coarse aggregate with water by sprinkling and shading
- Using chilled water
- Avoiding the use of the hot cement
- Adequately watering of sub-grade, form-work and reinforcement
- Intensive moist-curing with potable water of the concrete placed

No admixtures shall be used without approval of the Engineer

Where appropriate the Contractor shall take cognisance of CIRIA Special Publication No.31. Recommendations contained in this report shall be adhered to except that in the event of any discrepancies this Specification will take precedence unless authorised by the Engineer.

7.4.2 Potential Alkali Reactivity

Aggregate shall not contain any materials that are reactive with alkalis in the aggregate itself, the cement, the mixing water or in the water in contact with the finished concrete or mortar in amounts sufficient to cause excessive localised or general expansion of the concrete or mortar.

The Contractor may initially assess an aggregate source by testing in accordance with ASTM C289. If potential reactivity is indicated, then mortar bar tests in accordance with ASTM C227 shall be carried out and the results shall comply with the limits given in ASTM C33, before use of the aggregate is approved. Details of the tests shall be submitted to the Engineer. This is a **Hold Point.**

7.4.3 Reinforcement

Unless specified to the contrary high yield steel reinforcement shall be either hot rolled deformed bars or cold worked deformed bars to BS 4449 and shall have type 2 bond classifications.

Mild steel reinforcing shall be plain hot rolled bars to BS 4449. Steel fabric or wrapping fabric shall be to BS 4483. Where mild steel hot rolled deformed bars are used they shall be generally in accordance with BS 4449. Reinforcement shall not be manufactured from scrap steel, unless otherwise approved by the Engineer.

Where specified fusion bonded epoxy coated reinforcement shall be in accordance with the requirements of BS ISO 14654 and 14656. Coated reinforcement shall be delivered to site in its cut and bent form.

Cropped ends and minor discontinuities of the fusion bonded coating shall be factory coated using a suitable repair compound formulated in accordance with the manufacturer's specification.

Where specified fibre enhanced concrete shall contain fibres manufactured from 100 percent virgin polypropylene fibre and designed to achieve maximum distribution and freedom from clustering in the mix.

7.4.4 Reinforcing Bar Coupler

The use of proprietary reinforcing bar couplers to extend reinforcement will be permitted. Details of the coupler system shall be submitted to the Engineer prior to their use. This is a **Hold Point.**

7.4.5 Spacers

Dense sand/cement mortar spacing blocks shall be of a low permeability having similar strength, durability and appearance to the surrounding concrete.

Details of patent spacers shall be submitted to the Engineer. This is a **Notification Point.**

7.4.6 Tying Wire

Tying wire shall be 1.6 mm diameter black annealed mild steel wire for uncoated mild or high yield steel reinforcement. Coated bars shall be fixed with plastic coated annealed mild steel tying wire.

7.4.7 Anchor Tendons

All the materials used in the installation of anchor tendons including those used for the grout shall be in accordance with the requirements of BS 8081 BS EN 1537.

7.4.8 Gabion Baskets

Gabion baskets and mattresses shall be manufactured from cold drawn steel wire. Minimum wire diameter for baskets galvanised to BS EN ISO 1461 shall be 3.0mm whilst for plastic coated wire galvanised to BS EN 10244-2 shall be 2.7mm. The minimum radial plastic coating thickness shall be 0.25mm.

All steel wires shall be electrically welded at every intersection.

7.4.9 Holding Down Bolts

NOT USED.

7.4.10 Piles

If pre-cast concrete or steel piles are used all materials shall be in accordance with the requirements of the IEC 'Specification for Piling'.

7.4.11 Stubs

Stub steelwork and bolts shall not be inferior to the requirements of Clause 8.3.1.

7.4.12 Earthing

All mild steel used in the manufacture of earthing rods shall comply with the requirements of BS EN 10083 etc.: (minimum strength 600N/m) Earthing rods shall have a minimum diameter of 14 mm.

Phosphor-bronze used in the manufacture of earthing rod couplings shall comply with the requirements of BS 12163 etc.

All compression fittings shall be manufactured from electrolytic tough pitch high conductivity copper, complying with the requirements of BS 13600 and BS EN 1057 and 12449, designation C101.

Earthing conductors shall be in accordance with the following requirements:

(a) Copper strip to BS EN 1652, 1653 and 1654, Grade C101 or C102, minimum cross sectional; dimensions 20 mm x 3 mm.
(b) Hard drawn copper strand to BS 7884, minimum overall diameter 10.65 (7 x 3.55 mm);
(c) Galvanised steel wire to BS 183, minimum overall diameter 9.75 mm (7 x 3.25 mm).

7.5 WORKMANSHIP

7.5.1 General

All workmanship shall be in accordance with the requirements of this Specification, the appropriate British Standard and local regulations including the appropriate health and safety requirements. The Contractor shall comply with all local regulations in respect of safety measures during construction at site. All local regulations shall also be adhered to. Proper strutting, sheeting and bracing, including rearrangement of the installations when necessary, protection of slopes, methods of excavation to reduce risk of slides, etc., shall be the Contractor's responsibility to meet the for design and construction requirements. And workmanship, shall be in accordance with the requirements of ACI 308.1, 301M, 301, 117-117R also.

7.5.2 Site Working Area

The Contractor will be restricted to a specified maximum working area at each tower site. He shall, where required, mark this area to clarify boundary lines to other parties. The Engineer shall be kept informed of any activities by others within the working area.

The Contractor shall remove all vegetation and other debris from the tower site, which will interfere with his operation. Vegetation and debris removed from the tower site shall be disposed off outside the right of way as directed by the Engineer and/or in accordance with local regulations.

The Contractor shall dispose of material and regulate the movement of equipment, and slopes necessary to develop required loading characteristics shall be maintained, especially in side-hill locations.

7.5.3 Supports of Excavation

Excavations shall be adequately supported or formed to ensure stability of the sides and prevent any damage to the surrounding ground or structures. The design of suitable sheet piling and/or timbering for the tower of foundation excavation shall be in accordance with the recommendations of BS 8004 Section 5.

When the Contractor is requested, shall submit details of his temporary support to the Engineer.

Excavation material suitable for re-uses, as backfill shall be stored within the site working area. Excavation top-soil shall be stored separately.

Excavated material unsuitable for re-use shall be removed from site to a recognised dumping area provided by the Contractor, and approved by the relevant authorities.

For excavation in cohesive material the final 150 mm above formation level shall only be removed immediately prior to placing the blinding concrete. This activity shall be programmed to be carried out on the same day.

Excavation shall not be carried out below or adjacent to existing building foundations until under-pinning and shoring has been completed by the Contractor. Existing structures, foundations, and services shall be adequately protected or re-routed by the Contractor.

The Contractor shall not permit water to accumulate in any excavation unless otherwise agreed. Any water whether arising from the excavation or draining into shall be drained or pumped to an approved location well clear of the excavation area in a manner that does not cause erosion, silting or contamination of existing drains and watercourses. Before the method of ground water lowering is selected, adequate knowledge of the ground and water conditions has to be obtained from the results of a soil investigation and/or information, which may be available from the Engineer.

The Contractor shall take adequate steps to prevent adjacent ground from being, adversely affected by loss of fines in any de-watering process.

7.5.4 Use of Explosives

The Contractor shall familiarise himself and comply with the laws and local customs concerning the use, handling and storage of explosives.

(a) Permission

Explosives shall not be used on the Site without the prior approval of the appropriate Military and Civil Security Authorities and without prior written approval of the Engineer. This is a **Hold Point.**

(b) Control

The handling of all explosives on site shall be carried out in accordance with local requirements.

(c) Approval

The Employer shall be given a minimum of 24 hours notice of a proposal to use blasting and shall be given any details they may require concerning the charges and their positions. This is a **Notification Point.**

The Employer may regulate, restrict or prohibit blasting, if in their opinion it is necessary to do so for the safety of persons, property, and limit noise or to safe guard the works.

(d) Blasting

For explosives to be allowed in any area of the site, the following and any local requirements shall be strictly observed.

i) The Contractor will be required to strip overburden and vegetation to expose rock which requires to be blasted;

ii) Where there is any danger of flying rock engineering persons or property, blasting screens made of approved materials shall be laid over the rock to be blasted, to help prevent dangerous projection of fragments;

iii) The use of electric detonators will not be permitted within 60 meters of any overhead power lines;

iv) Delay blasting techniques will be mandatory for all primary blasting with charge limits per delay period being imposed in order that ground vibration from the blasting can be controlled to a peak particle velocity of 25 mm/sec. in the vicinity of any structures or installations;

v) All charges prior to firing will be covered with thick gunny sacking and 1.8m squares of steel mesh weighed down with filled sandbags in order to prevent the projection of rock fragments;

vi) The Contractor will be required to take adequate and effective precautions to prevent debris rolling onto public or private roads and property.

The erection of magazines for storing explosives on site will not be permitted.

7.5.5 Reinforcement

(a) Storage

All reinforcement shall be adequately stored to prevent contamination or damage.

(b) Cutting and Bending

All reinforcement shall be bent cold unless otherwise permitted by the Engineer. Reinforcement shall not be straightened or re-bent in a manner which may cause injury to the material. All reinforcement shall be cut and bent in accordance with the requirements of BS 8666 and BS EN ISO 4066. The reinforcement shall be clearly identified with securely fixed, durable tags.

(c) Fixing

All reinforcement shall be rigidly fixed in position to the concrete cover specified by an approved means. The Contractor shall be responsible for ensuring that the reinforcement is properly towered and maintained in position by the adequate use of chairs, spacers and tying wire.

The reinforcement shall be free of all loose rust, scale or contamination of any kind. The reinforcement shall be inspected/checked after being fixed and no concrete shall be placed around the reinforcement until such checking/inspection has taken place and concrete permission has been signed by the Engineer.

(d) Site Bending

Bending and subsequent straightening of reinforcing bars projecting from the existing concrete shall be undertaking as follows:

i) Unless noted otherwise on the drawings, the minimum distance from the existing concrete to the beginning of a bend and the minimum inside diameter of the bend shall be:

7.1.1.1.1.1.1.1 Bar Diameter Min Distance from Min Inside bend

surface to beginning (mm)

radius

of bend

10-24	3 Bar Diameters	3 Bar Diameters
25-32	4 Bar Diameters	3 Bar Diameters
<32	5 Bar Diameters	5 Bar Diameters

ii) Bars of 10 to 16 mm diameter may be bent once without heating, heating is required for subsequent straightening or bending.

Bars of 20 to 32 mm diameter may be bent once and subsequently straightened, heating is required in all cases.

Bars having a diameter greater than 32 mm may be bent only with the approval of the Engineer, heating are required in all cases.

iii) Heat shall be applied as uniformly as possible over a length of bar equal to 10 bar diameters. The centre of the heated length shall be at the centre of the completed bend. The temperature shall be maintained consistent during bending and straightening operations and shall not exceed 350°C. Temperature measuring crayons or a contact pyrometer shall be used to determine the temperature. Care shall be taken to prevent quenching of the heated bars either by application of water, or by a high volume of air.

iv) Straighten bars shall be visually inspected before and after straightening to determine whether they are cracked or otherwise damaged. This is a **Notification Point.**

(e) Epoxy Coated Bars

i) The Contractor shall take all necessary precautions to minimise damage to the coating during off-loading, handling and fixing. All equipment used for handling of coated bars shall have padded contact areas. Coated bars or bundles shall not be dropped or dragged.

ii) Coated bars shall be stored separately to uncoated bars.

iii) Coated bars shall not be cut or bent on site without the prior approval of the Engineer.
This is a **Hold Point.**
Cut ends and any damage to the coating shall be repaired in accordance with Clause 7.5.

iv) Coated bars shall be towered on epoxy coated wire chairs or on chairs of dielectric material.

7.5.6 Concrete Trial Mixes

Trial concrete mixes using representative materials shall be carried out under full scale conditions using the Contractor's proposed method subject to the Engineer's approval. In case of use of ready mixed concrete, trial mixes shall only be waived, if an earlier proven mix design is used.

Testing shall be carried out in accordance with BS EN 12350. Trial mix test specimens shall be prepared and tested at approved laboratory. Aggregate used in trial mix shall be collected from the source proposed by the Contractor and approved by the Engineer. The target mean strength of the trial mixes shall be specified concrete cube strength plus adequate safety margin as stated in BS / ACI standard.

To ensure the durability of the concrete, the requirements specified in Appendix 7.A6 shall be adhered to with regard to characteristic strength, minimum cement content slump requirement and maximum free water/cement ratio.

The tests shall be carried out on three different days during which the workability will be recorded and nine cubes made. Among the nine cubes, three will be crushed at seven days; three will be crushed at fourteen days and the remaining three at twenty eight days. This is a **Notification Point.**

7.5.7 Batching

The aggregate and cement shall be proportioned by means of efficient weigh batching machines. The machine shall be carefully maintained and cleaned and they shall be provided with simple and convenient means of checking the weighing mechanism and they shall be checked when required by the Engineer.

Batch materials, shall be measured out within the following tolerances and shall be discharged into the mixer without loss.

Cement - ± 2 percent of the mass of the cement in the batch.

Aggregate - ± 2 percent of the mass of each aggregate in the batch.

Admixtures - ± 5 percent of the amount to be added to the batch.

Mixing Concrete by Machine

The concrete is to be mixed in batches in machines which comply with the requirement of BS 1305. The machines are to ensure that all the concreting materials including the water are thoroughly mixed together between the time of their deposition in the mixer and before any portion of the mixture is discharged. The machines must be capable of discharging their content while running.

7.5.8 Workability

The Contractor shall carry out slump or other workability tests as required during concreting of the works in order to relate the degree of workability of the mix with the numerical value obtained during the trial mixes.

7.5.9 Blinding Concrete

Blinding concrete shall be provided under specified foundations to a minimum thickness of 75 mm.

7.5.10 Formwork

All formwork shall be accurately constructed to prevent loss of grout and to produce the correct foundation shape. Formwork shall be sufficiently strong to withstand the pressures arising from the concrete during placing and compaction and shall be capable of removal without undue disturbance to the concrete.

All form-work and moulds shall be of such tight construction that slurry cannot flow out at the joints during pouring and compaction. If required, joints shall be sealed with foam rubber strips.

Formwork shall be retained in position after concreting for a minimum period of 48 hours.

7.5.11 Placing and Compacting

Concrete shall normally be discharged from the delivery vehicle within two hours after the time of loading at the ready mix plant in accordance with the requirements of BS 8500 and BS EN 206. With the Engineer's approval these periods may be exceeded with the use of a suitable retarded and/or plasticizer, provided that there is no change in the quality of the concrete. Concrete must at all times -have the desired workability and characteristics at the point of placing. Any concrete which no longer meets this requirement shall be removed from site.

Placing by pump, conveyor or pneumatic method shall be subject to approval by the Engineer. There shall not be any loss of quality in the concrete, nor harmful effects to the works by such methods. Concrete pumps shall be operated by mechanically applied pressure and shall produce a continuous stream of concrete without air pockets.

Where pumps are used the velocity of discharge shall be regulated, by suitable baffles or hoppers where necessary to prevent segregation or damage and distortion of the reinforcement, embedded items and formwork, caused by impact.

When pumps are used on large or complicated pours a standby pump shall be provided.

Precautions shall be taken to avoid depositing water or grout in the Works during starting up operations, or in flushing, or clearing the pipeline. The pipeline shall pass its own length of concrete in not more than 20 minutes.

Chutes used to deliver concrete shall not be sloped so as to cause segregation of the mix.

Concrete shall be fully, compacted by vibration or other approved means and shall completely fill the shutter. Immersion vibrators shall be inserted in such a manner and at intervals as will ensure the satisfactory uniform compaction of the concrete. The vibrator shall penetrate the full depth of the layer and where the underlying layer of concrete has not initially set, they shall enter and re-vibrate the layer to ensure that succeeding, layers are well bonded together. Withdrawal of vibrators shall be such as to prevent the formation of voids. Piles of concrete within the formwork shall not be moved by immersion of the vibrator, nor shall segregation be caused by over vibration. Undue laitance or leakage through the formwork shall be avoided. It shall be fully, worked around reinforcement and other embedded items which shall not be disturbed. The Contractor shall provide standby vibrators.

The Contractor shall maintain records of daily returns of the quantity, concrete mix and location within the Works of all concrete placed. These shall be forwarded to the Engineer when requested.

7.5.12 Joints

Construction joints shall be made across planes of minimum shear and away from planes of maximum bending moments. Vertical construction joints shall be made against properly constructed stop boards firmly fixed and holed where necessary to pass reinforcement. To ensure bond between old and new concrete at construction joints, surfaces of the cast (old) concrete shall be cleaned of all defective concrete, latency, oil, grease, dirt, loose concrete, etc. and shall properly be roughened by chipping, hammering or other techniques to expose the aggregates and provide sufficient key for the two layers.

The pad and chimney (for pad and chimney type foundations) shall normally be cast in one operation without construction joints. Where the formation of a joint is unavoidable the surface against which the fresh concrete is to be placed shall be prepared in accordance with Clause 6.12 of BS 81 10: Part 1. This is a **Notification Point.**

Construction joints in anchor or pile caps, monoblock and raft foundations shall be treated in similar manner to that described above. When the embedded reinforcement is insufficient to transmit the required design load, additional reinforcement in the form of 'starter' bars shall be provided. No construction joints are permitted in cast-in-situ concrete piles, drilled shaft or side bearing foundations.

7.5.13 Curing and Protection

Curing and protection shall start immediately after the compaction of the concrete and shall ensure adequate protection from:

(a) Premature drying out, particularly by solar radiation and wind;
(b) Leaching out by rain and flowing water;
(c) Rapid cooling during the first few days after placing;
(d) High internal thermal gradients;
(e) Vibration and impact which may disrupt the concrete and interfere with its bond to the reinforcement or other embedded items.

Where curing compounds are used to protect exposed surfaces from solar radiation and improve moisture retention, they shall be subject to the approval of the Employer. This is a **Hold Point.**

The temperature of the fresh concrete at the time of delivery on site shall be in accordance with requirements of BS 8500 and BS EN 206.

7.5.14 Grouting of Anchor Tendons

The installation and subsequent grouting of anchor tendons shall be in accordance with the requirements of BS 8081 and BS EN 1537.

7.5.15 Drilled Shaft piled Foundations

Drilled shaft shall be installed and concreted strictly in accordance with the recommendations of BS 8004 Sub-clause 7.4.5 and as summarised below:

(a) To ensure drilled shafts remain uncontaminated with spoil, shafts shall be extended by 300 mm or a depth equivalent to the total pitch of the auger blades (excluding continuous flight augers) below the calculated depth of the auger;

(b) When shafts are installed using bentonite slurry techniques the stability of the sides of the shaft shall be maintained throughout the installation by an adequate head of bentonite slurry in conjunction with the temporary casing;

(c) Reinforcing cages shall be provided with roller spacers of an approved type to ensure that the minimum specified concrete cover is achieved, especially as regards the cover at the bottom of the shaft;

(d) The tremie pipe shall have a minimum diameter of 150 mm and shall be filled with an effective plug prior to charging with concrete;

(e) Effective means shall be provided for raising or lowering the tremie quickly by towering the hopper from a crane. The hopper shall have a minimum capacity equivalent to that of the tremie;

(f) The tremie shall always be kept full of concrete and shall adequately penetrate into the concrete to prevent accidental withdrawal if the pipe is surged to discharge the concrete.

Piled foundations shall be installed in accordance with the requirements of the IEC 'Specification for Piling'.

7.5.16 Stub Setting

Stubs shall be held firmly in position by a stub setting template or other device while the concrete is placed. This tower shall be maintained until backfilling of the foundation is complete, or for drilled shaft, anchor and pile caps, monoblocks, rafts etc until a minimum period of 48 hours has elapsed after concreting.

Concrete blocks may be used to tower the lower end of the stub, and they shall have similar strength and durability to the surrounding concrete.

Where holding bolt assemblies are used, setting templates shall be used and retained in position for a minimum of 48 hours.
Stub setting templates shall be used to maintain the position of steel grillage foundation is during backfilling.

7.5.17 Backfilling of Foundations

Backfilling shall be compacted in 300 mm layers to achieve a bulk density of 1.6 Mg/m3, or the value assumed in the design analysis (if this is less than 1.6 Mg/m3).

Commencement of backfilling, shall be a **Notification Point.**

During backfilling, the side sheeting to the excavation shall, where possible, be progressively withdrawn such that the toe of the sheeting, is never more than 600 mm below the surface of the compacted material.

Extreme care shall be taken by the Contractor during compaction to ensure that the foundation is not damaged nor caused to move out of position. During the placing of backfill the hole shall be kept free from water. All temporary timbering and all decomposable material shall be removed from the excavations prior to backfilling.

Refilling around the pile head pits shall be carried out only after all works within the excavations have been inspected and approved by the Engineer.

The Contractor shall select the compaction plant most suitable for achieving the required bulk density. Acceptable methods of compaction shall include, but not be restricted to, the use of vibrating plate compactor or diesel hand operated vibrating Wacker plate. The actual method of compaction selected will depend on the type of material to be compacted and the difficulty in accessing areas within the excavation.

Backfilling of the directly embedded pole annulus shall be undertaken using crushed rock aggregate in accordance with BS EN 12620, with a nominal maximum size of 40 mm.

7.5.18 Site Clearance

As soon as possible at each tower site, backfilling should be completed, surplus soil removed and the site cleared at the Contractor's cost. Final site clearance normally carried out at the same time as fitting of anti-climbing guards and danger and notice plates, shall be undertaken without delay. The Contractor shall be responsible for compacting and re-levelling ground to the original surface level and gradient. Where agreed by the Engineer a percentage of the spoil may be disposed of by local spreading and the balance, if any shall be removed from site.

7.5.19 Reinstatement of Working Areas

Reinstatement of all working, access and storage areas shall be the responsibility of the Contractor.

A programme for reinstatement works shall be submitted to and approved by the Engineer prior to the issue of the taking over certificate.

Reinstatement where specified shall include all necessary topsoil preparation, hydro-seeding and the planting of shrubs and trees to a standard at least equal to the condition of the site prior to construction. The sequence of work shall be such as to ensure establishment of all species and the age and state of growth of plants shall be such as to ensure successful replanting at site.

All such work shall be completed to the satisfaction of the Engineer and the relevant regulatory authorities.

7.5.20 Site Stabilisation

Where foundations are installed on sloping or unstable ground the Contractor shall be responsible for ensuring the stability of the area and the safety of the public, all to the satisfaction of the Engineer and local regulatory authorities.

Stabilisation shall be achieved by approved methods such as retaining walls, buttresses, sprayed concrete, rock bolts, dowels or gabion baskets/mattresses.

Site assembly of gabion baskets and mattresses shall be carried out in accordance with the manufacturer's instructions. Gabions shall be placed in position prior to filling and secured to adjoining gabions with lacing wire. Filling material shall be between 100 and 150 mm; 90 percent of the fill to be retained on a 100 mm ring. The fill shall be tightly packed with no apparent voids, and shall be overfilled by 25-50 mm to allow fat settlement lids shall be laced immediately after filling.

Where necessary to prevent erosion and as stipulated by the Engineer, or the appropriate authority, surface drainage channels shall be provided; surge chambers stopped ends and sub lets shall be formed as required. Where surface vegetation has been removed from sloping ground such that erosion could occur the area shall be reinstated by planting of grasses using hydro-seeding methods or band sprigging.

7.5.21 Site Protection

Where specified tower legs or foundations are in areas open to vehicle access, the Contractor shall install barriers of a type approved by the Engineer to prevent vehicle coming into contact with the tower or foundation.

7.5.22 Protection of Tower and Tower Footing

Tower shall be spotted such that the quantity of revetment is optimum. For tower locations in undulated terrain such as hill / mountain slopes, options like use of unequal leg extensions for towers, unequal chimney extensions etc. shall be explored by the contractor for optimizing the need for revetment & benching.

The work shall include all necessary stone revetments, concreting and earth filling above ground level, the clearing from site of all surplus excavated soil, special measures for protection of foundation close to or in nalas, river bank/ bed, undulated terrain, protection of up hill/ down hill slopes required for protection of tower etc., including suitable revetment or galvanised wire netting and meshing packed with boulders. The top cover of stone revetment shall be sealed with M-15 concrete (1:2:4 mix). Contractor shall recommend protection at such locations wherever required. Details of protection of tower/tower footing are given in drawing enclosed with these specifications for reference purpose only.

Tower footings shall generally be backfilled using soil excavated at site unless unsuitable for backfilling. In the latter case, backfilling shall be done with borrowed earth of suitable quality irrespective of leads and lift. The unit rate for backfilling quoted in BPS shall include the required lead and consolidation and leveling of earth after backfilling.

The provisional quantities for protection work of foundations are furnished in BPS. The unit rates shall also be applicable for any quantity variations during execution. The same unit rates shall hold good for protection work carried out on down hills or up hills slopes applicable for the tower locations.

The unit rates for random rubble masonry revetment quoted in price schedule shall also include excavation & (1:6) random masonry and unit rate for top sealing with M-15 concrete. For payment purposes the volume of random rubble masonry revetment shall be measured from bottom to top sealing coat and paid at the unit rates indicated in the Letter Of Award.

No extra payment shall be made for allied works such as excavation for revetment, packed stone at head of weep holes etc. However, no deduction shall be made for the volume enclosed by weep holes.

For some of the locations in nalas, river bed or undulated terrain etc., boulders of minimum. 150mm size bounded and packed in galvanised wire net/mesh of 8 SWG wire and 152 square (maxm.) mesh are to be provided. These stones shall be provided in crates size of 2.0mx2.0m or as deemed suitable for a particular location. Measurement shall be taken in cubic meters and 15% deduction will be made for void from cage/stack measurements.

7.5.23 Earthing

The maximum tower footing resistance with earth wires disconnected shall be 5 ohms. Earthing shall be provided with two diagonal legs of each tower as shown in enclosed drawing. If additional earthing is required, additional earthing conductor shall be attached to the tower at the earthing holes specified and shall be sufficiently buried to prevent accidental excavation. The amount of earthing conductor to be buried or earthing rods installed will be dependent upon achieving the required footing resistance.

The excavation for the earthing conductor shall be 400 mm wide and not less than 800 mm deep in cultivated land where required by the Employer. The earthing conductor shall be laid at a depth of approximately 700 mm, being placed centrally in the trench. The trench shall be backfilled with a suitable medium.

The connection between the additional earthing conductor and tower leg shall be by approved thermo-weld joints.

Where necessary in areas of high resistance 90 mm diameter holes shall be drilled along the tower diagonal, each having, an earthing rod surrounded by a Bentonite/ sodium carbonate mix. The depth of hole depending on the resistance of the soil. The earth rod shall comprise standard rods coupled together and connected back, to the tower leg.

For towers within 150 m of a substation and connected to the substation earthing system, no additional earthing, will normally be required.

7.6 PROTECTIVE TREATMENT

7.6.1 Galvanising

All stub steelwork, pole sections and holding down bolts shall be protected by hot-dipped galvanising to comply with the requirements of BS EN ISO 1461.

7.6.2 Epoxy Coal Tar Paint

All directly embedded pole sections, steel pile and caisson sections, guy anchor rods shall be protected by two coats of epoxy coal tar paint. For steel pile sections, this treatment shall only apply to the initial 2 in below final -round level.

7.6.3 Epoxy Coated Reinforcement

Coating, damaged during transit handling or fixing shall be repaired only with the approved repair compound supplied, to ensure compatibility with the Fusion Bonded Epoxy Coating. All repairs shall be carried out strictly in accordance with the manufacturer's instructions.

When the extent of the coating damage on any metre length of bar exceeds 1% of the surface area, the bar shall be rejected. This is a **Notification Point.**

7.6.4 Tower Steelwork and Stub-Concrete Interface

After curing has been completed all exposed concrete above ground level and 300 mm below ground level shall be coated with Coal Tar Epoxy coating applied by either conventional spraying or brushing to give a minimum dry film thickness of 300 µm. The surface of the concrete shall be allowed to cure for at least 28 days prior to surface preparation unless otherwise agreed with the Engineer. After adequate curing all surface laitance, dirt and other contaminants shall be removed. Prior to the application of the coating, cracks in the concrete greater than 2mm in width and surface irregularities, including blow holes, with a depth greater than 10mm, shall be filled with a proprietary fairing coat compatible with the coating system. The surface of the substrate shall be prepared in accordance with the coating manufacturers recommendations. Primers where necessary, shall be obtained from the same manufacturer as the top coat.

All tower steelwork below the maximum anticipated flood level shall be protected by Coal Tar Epoxy coatings. All steelwork to a minimum height of 3m above ground level shall be protected by factory application with the remainder applied on site, including the stub above concrete level.

For factory application the galvanised steel members should be blast cleaned to a minimum Sa2 standard BS 7079 using a fine grade mineral blasting medium. The coating shall be applied by either conventional spraying or brushing to give a minimum dry-film thickness of 300 µm. Prior to application, the Coatings Applicator shall submit procedures for coating, application and quality control measures for approval by the Engineer. This is a **Hold Point.**

The method of application of the coating system shall be in accordance with the approved procedures and manufacturer's instructions. The contractor shall ensure that the proposed coverage rates will enable the specified minimum dry film thickness of each coat to be attained. Wet film thickness gauges shall be used to check the thickness of the applied coating.

Each application of the coating shall be generally free from surface defects, particularly catering, pin-holing, ravelling, and sagging, battiness, and dry spray and cussing. The finished system shall have a uniform appearance.

For site application the same procedure shall be adopted except that use of a 'etch primer' instead of blast cleaning on site will be permitted. The 'etch primer' must be obtained from the same supplier as the coating and applied strictly in accordance with the manufacturers instructions including the cleaning and decreasing of the tower steelwork on site.

7.6.5 Earthing Material

Steel earth rods shall be clad with 99.9 percent electrolytic pure copper molecularly bonded to the steel, with a minimum thickness of 0.35 mm. The earthing conductor at the ground interface and at the connection to the tower shall be protected against corrosion.

7.6.6 Protection of Buried Steelwork

Where it is necessary for tower steelwork to be buried, it shall be buried not more than 1.0 m and shall be protected by an approved medium e.g. mastic impregnated tape or bitumastic paint. Details of the proposed materials, application and Quality Control procedure shall be submitted to the Engineer. This is a **Hold Point.**

7.7 QUALITY CONTROL

7.7.1 General

Type, sample and routine tests shall be undertaken on all materials used in the construction of the foundations, and where appropriate on the complete foundations, or parts of the complete foundation in accordance with the requirements of this Specification.

7.7.2 Bentonite Slurries

Bentonite slurries used to tower the sides of the drilled shaft foundations shall be prepared and controlled in accordance with the recommendations of BS 8004 Clause 6.5.3.8 and as summarised below:

(a) Bentonite shall be supplied in accordance with the Oil Companies Materials Association Specification No. DFCP4;
(b) After mixing, with clean fresh water the fully hydrated bentonite slurry shall have a density of less than 1. 10 g/ml, a viscosity as measured by the Marsh cone between 30s to 90s and a 10 minute gel strength in the range of 1.4 to 10 N/m2;
(c) Immediately prior to concreting, the density of the slurry at a level of 200 mm above the bottom of the shaft shall be less than 1.5 g/ml;
(d) The pH value of the slurry shall be maintained within the range of 9.5 to 12.

7.7.3 Reinforcement

All reinforcement shall be supplied from approved suppliers, complete with the appropriate test certificates in respect of the test requirements of BS 4449 or BS 4483 as appropriate. Copies of these certificates shall be made available to the Engineer upon request. Where test certificates are not available the Contractor shall arrange for the tests to be undertaken in accordance with the specified standards.

7.7.4 Inspection Prior to Concreting

The Contractor shall give the requisite period of notice to the Engineer of his intention to commence any concreting and shall submit at the same time a record of his inspection of completed preparatory works. Which shall include all works related to the fixing of reinforcement? This is a **Notification Point.**

7.7.5 Trial Mixes

A trial mix will be approved when the requirements of BS 8500 and BS EN 206 are met. Copies of the trial mix test results shall be submitted to the Engineer.

7.7.6 Workability

The Contractor shall carry out slump or other workability tests as required during concreting of the works in order to relate the degree of workability of the mix with the numerical value obtained during the trial mix.

Slump tests shall be carried out in accordance with the procedure laid down in BS EN 12350-1. A slump test will be accepted as complying with the Specification when the results are within the following limits:

±25 mm or ± one third of the required value, whichever is the greater.

7.7.6.1 Works Cubes

Compliance with the specified characteristic strength shall be based on tests made on cubes at twenty eight days. Cubes shall be made, cured and tested in accordance with BS EN 12350-1. Samples of Concrete shall be taken at the point of discharge from the delivery vehicle.

Unless otherwise directed by the Engineer one set of cubes shall be prepared for each $6m^3$ of concrete placed or tower foundation subject to one set of cubes being formed on each day that concreting is carried out or tower pile foundation subject to one set of cubes being formed on casting of each pile.

One set of cubes consisting of four test cubes shall be made from the working concrete.

In preparation of test cubes/specimens vibrators shall not be used.

Concrete shall be tested for slump at every 1 hour interval.

Each set of cubes shall be accompanied by a certificate noting the details required by BS EN 12350-1.

Cubes shall be tested in accordance with BS EN 12350-1 to determine the density and characteristic strength as follows:

(a) One cube shall be tested at seven days to provide an early indication as to whether the twenty eight day strength is likely to be achieved;

(b) Two cubes shall be tested at twenty eight days, the average strength shall be deemed the test results;

(c) One cube shall be held in reserve for further testing, if required.

The test report shall provide information in accordance with BS EN 12350-1.

Concrete shall be assumed to have achieved its characteristic strength when, at twenty eight days, the conditions specified in BS 8500 and BS EN 206 are met.

Copies of the test reports shall be made available to the Engineer on a regular basis. This is a **Notification Point.**

The Employer will consider whether the concrete in the Works represented by cubes falling below the limits laid down can be accepted, and he may order that any or all of the following, actions shall be taken:

i) Penetration resistance or surface hardness tests;
ii) The drilling of test cylinders in the concrete and testing the samples to destruction by compression;
iii) The cutting out and replacement of such volumes at their discretion which they consider to be defective;

7.7.7 Setting Out Tolerance

Towers shall be centre-pegged with a displacement along the line of the route not greater than 2 in relative to the profile, and to a displacement in transverse alignment not greater than 50 mm relative to a theoretical line adjoining the adjacent angle pegs.

7.7.8 Foundation Setting Tolerances

The maximum permitted stub tolerances measured at the top of the stubs shall be as detailed in Table 7.1 and are to apply immediately prior to erecting the tower. Should these tolerances not be achieved the Contractor shall submit details of his proposed remedial measures to the Engineer for approval. This is a **Hold Point.**

Records of the foundation setting out measurements shall be made available to the Employer.

Table 7.1 - Foundation Setting Tolerances

Principal Dimension	Tolerance
Nominal face dimension	10 mm or ± 0. 1% of face dimension (whichever is greater)
Nominal diagonal dimension	± 15 mm or ± 0. 1% of diagonal dimension (whichever is greater)
Rake of stub from required face or hip slope	1:100
Stub level	
(a) Maximum difference in level between all dimension (whichever is greater)	10 mm or 0.05% of diagonal four stubs of a foundation
(b) Maximum difference between the mean levels of pairs of diagonally opposite stubs	±6mm
Twist of stub in plan	1˚ about longitudinal axis

7.7.9 Backfilling

Testing of the backfill to ensure that the design value of soil bulk density is achieved may be undertaken using an approved penetrometer. Results of the tests shall be made available on request to the Engineer. However, the Engineer reserves the right to request the Contractor to undertake in-situ density tests in accordance with-BS 1377 Part 9 as necessary.

Where imported back-fill is required the following details shall be supplied to the Engineer:

(a) the type of fill
(b) evidence that when compacted a bulk density consistent with the value assumed in the design can be achieved.

7.7.10 Foundation Tests - General

When requested by the Engineer full scale foundations tests both design and routine/proof shall be undertaken on all types of foundations.

Tests shall unless specified otherwise be undertaken in accordance with IEC 61773.

When design tests are required, the sites selected shall be representative of the geo-technical conditions throughout the length of the transmission line, in which the Contractor proposes to install that type of foundation.

The Contractor shall submit to the Engineer the following information:

(a) Details of the test sites, including all geotechnical parameters;
(b) Details of the proposed test equipment, test layout, measuring equipment, test procedure and the test program. This a **Hold Point.**
(c) On completion of the design tests the requisite number of test reports shall be submitted to the Engineer.

The ultimate resistance of the foundation shall unless otherwise specified be determined from the lesser of:

i) the resistance equivalent to a temporary displacement of 25 mm or,
ii) the resistance equivalent to a permanent displacement of 10 mm.

Reports on pile testing shall be submitted to the Engineer and shall contain, among others, the following information:

(a) Layout of test equipment and description
(b) Pile identification, diameter and length
(c) Sketch of soil conditions and ground water location
(d) Complete records of level, load cell and dial gauge readings against date and time throughout the test in a tabulation
(e) Graphs of load and settlement/heave versus time
(f) Graphs of settlement/heave versus load
(g) Remarks concerning any unusual occurrences during the loading of the pile.

(h) Test reports on integrity testing of piles shall include clear sample diagrams of acceptable signals for comparison purpose, as well as sample graphs indicating defects or doubts on the integrity of the pile.

The Engineer will decide on completion of tests and evaluations whether the test piles shall be left in place or shall be extracted. No extra payment will be made for the extraction of test piles.

7.7.11 Concrete Pad & Chimney Foundation - Tests

Not used.

7.7.12 Piled Foundation - Tests

Unless specified to the contrary, design uplift and compression tests on piled foundations (service piles selected by Employer) shall be undertaken. The Contractor shall give the Engineer testing procedure for approval and the requisite period of notice prior to undertaking the tests. This is a **Hold Point.**

The tested pile shall be deemed to comply with its specified ultimate load when, after the load is held for at least 30 minutes, the following criteria are satisfied:

i) The displacement at the head of the pile is less than 25 mm or
ii) The movement of the head of the pile shall be slowing down and less than 0.25 run/hour
iii) The displacement at the head of the pile after all load is removed (after 10 minutes) is less than 10 mm.

7.7.13 Integrity Testing

Integrity tests shall be performed on drilled shaft concrete piled foundations selected by Employer for checking the uniformity, continuity and length of such piles using the acoustic pulse echo method shall be undertaken by a specialist subcontractor appointed by the Contractor. Details of practical experience of the subcontractor along with details of the test equipment, procedure of testing, presentation of test data/results shall be submitted along with tender. The integrity test shall be done at least one time for one pile of each leg selected by the Engineer. The actual method of performing the tests and the interpreting the results shall be subject to the Engineer's approval. This is a **Hold Point.**

The Contractor shall give the Engineer the requisite period of notice prior to undertaking the tests. This is a **Notification Point.**

The results of the integrity testing shall be made available to the Engineer upon request.

7.7.14 Earthing Resistance Test

Earth electrical resistance tests shall be undertaken at each tower prior to the erection of the earth wire. The Contractor shall give the Engineer the requisite period of notice prior to undertaking the tests. This is a **Notification Point.**

On sites subject to seasonal variations in the rainfall, or the level of the water table and sites requiring special earthing arrangements additional earth resistance tests shall be carried out at intervals to establish the affects on the resistance of such seasonal variations.

The method of measurement and equipment to be used shall be subject to the approval of the Engineer. This is a **Hold Point.**

The results of the earth resistance tests both initial and final i.e. after additional earthing has been installed shall be forwarded to the Engineer.

7.7.15 Protective Coatings

Where protective coatings are applied to buried tower steelwork or to exposed concrete surfaces, appropriate routine tests to demonstrate the quality of application shall be undertaken.

The Contractor shall submit to the Engineer his routine test proposals.

This is a **Hold Point.**

The Contractor shall give the Engineer the requisite period of notice prior to undertaking the tests. This is a **Notification Point**. The results of the tests shall be made available to the Engineer upon request.

7.8 RATES AND MEASUREMENT

7.8.1 Open cast Foundation

7.8.1.1 The indicative shape of foundations is enclosed in this Specification. The bidder is required to quote the unit rates for different foundation activity namely, excavation for different types of soils, concreting, supply and placement of reinforcement steel and stub setting in the BPS.

7.8.1.2 The unit rates of excavation for each type of soil shall include excavation along with all associated activities like shoring, shuttering, dewatering till completion of foundation work stock piling, dressing, back filling of foundations after concreting with excavated/borrowed earth (irrespective of lead) and consolidation of earth, carriage of surplus earth to the suitable point of disposal as required by the Employer or any other activity required for to completion of foundation work in all respect.

7.8.1.3 The measurement for excavation shall be made on the basis of design excavation volume arrived at considering dimension of pit leaving 150mm gap around (except for under cut foundations) the base pad or actually excavated whichever is less and the unit rate of this item as indicated in Letter of Award. The payment for excavation shall be made as per actual type of soil encountered at the time of excavation, but the total payment for excavation portion shall not exceed the amount as payable for excavation considering the soil type same as that of foundation classification. The decision of the Employer shall be final and binding with respect to classification of soil and foundations.

7.8.1.4 Form boxes shall be used for casting of foundations. The unit rate of concreting shall include the cost of supply, fabrication and placement of form boxes, cement, water, coarse and fine aggregates mixing and placing of concrete, curing of concrete and any other activities related / required for completion of concreting works of foundation. The payment for this item shall be made as per the actual volumes of concreting completed but limited to design volume based on unit rates indicated in the letter of award.

7.8.1.5 The unit rate of 'Reinforcement Steel' shall include supply and placement of reinforcement steel, stirrups, wire for binding the reinforcement, chairs, bolsters and spacers etc. as required to complete the foundation work. The payment of reinforcement steel shall be made based on the

working drawing. Wastage overlaps, spacer bars, chairs, stays, hanger and annealed steel wire shall not be measured for the payment and cost of these items shall e deemed to be included in the rates for reinforcement.

7.8.2 Pile Foundation

7.8.2.1 **Excavation**

7.8.2.1.1 ***The unit rate for excavation shall be quoted by the Bidder in the respective schedule of BPS. The unit rate quoted shall hold good for excavation (other than boring) for all depth and size in all types of soil including sheet piling, sheeting, shoring, bracing, draining, dewatering, cofferdams etc. as required for successful completion of job.***

7.8.2.1.2 ***The unit of measurement shall be in cubic meter. The design excavation volume shall be calculated considering dimension of pile cap plus 150mm on all sides of the pile cap and depth as shown in the drawing below the lean concrete level. The payment shall be made based on unit rate quoted, for excavation actually carried out or as per the design excavation volume as calculated above, whichever is less. No extra payment shall be admissible for excavations if required to be carried out in slope to maintain stability of pit.***

7.8.2.1.3 ***The Contractor shall arrange to transport the excavated soil to a distance as directed by Employer and the rates quoted for excavation in Price schedule shall include all lead, lift, carriage etc.***

7.8.2.2 **Cement Concrete**

7.8.2.2.1 ***Actual volume of work as executed or as per drawing issued, whichever is less, measured in cubic meter corrected up to second place of decimal shall be considered for payment as per unit rate quoted in BPS. Deductions for openings, conduits, pipes, ducts, pockets etc. shall only be made provided they are larger than 0.1 sq.m. in area (for each opening) .***

7.8.2.2.2 ***No deduction shall be made for embedded fixtures including reinforcement, sleeves, anchor bolts and similar items.***

7.8.2.2.3 ***The volume for structural concrete and lean concrete shall be measured separately.***

7.8.2.3 **Form Work**

7.8.2.3.1 ***Formworks of different types / shapes shall be measured with reference to actual surface area in contact with the concrete and paid on area basis. The unit of measurement will be in sq.m. corrected up-to second place of decimal.***

7.8.2.3.2 ***No payments for formwork for construction joints shall be made.***

7.8.2.3.3 ***Opening up to 0.1 sq.m. of boxing left for inserts etc. shall not be considered as if non-existent for the purpose of formwork measurement of surface in which the opening occur. If the cross-sectional area of any openings exceeds 0.1 sq.m., area of such openings shall be measured and deducted from the area payable for the form work.***

7.8.2.3.4 ***No payment shall be made for making the formwork water proof or for supports, scaffolding, centering, approaches, etc.***

7.8.2.3.5 No separate payment shall be made for using fillets for rounding of chamfering junctions, corners, etc.

7.8.2.4 **Back filling**

The actual volume of backfilling shall be measured in cubic meter rounded off up to 2nd place of decimal and the unit rate shall include all the necessary operations required to complete the work as per drawing & Specifications stated in this section.

7.8.2.5 **Reinforcement Steel**

7.8.2.5.1 The unit rate for reinforcement steel shall include supply and placement of reinforcement steel of specific grade, stirrups, annealed wire for binding the reinforcement, chairs, hangers, spacers, welding, tack welding etc. as required to complete the RCC work in pile, pile cap, pedestal/chimney, tie beam (if required) including cleaning, straightening, cutting, bending, binding etc. The unit rate shall also include placement of reinforcement cage in pile shaft/bore and all other cost for tools, plants, materials, labour, and transportation to site by appropriate means as required. The measurement for payments shall be made in Metric Ton (MT) corrected up to third place of decimal based on the calculated weight of reinforcement steel as per construction drawing and with reference to the sectional weights of respective size of reinforcement bars as per Indian Standards or reinforcement bars actually provided, which ever is less. The unit rate quoted shall be inclusive of all wastage.

7.8.2.5.2 Standard hooks, cranks, bends, authorised laps, etc. shall be measured.

7.8.2.5.3 Separator pieces between two or more layers of steel shall not be measured.

7.8.2.5.4 No payment shall be made for supports, spacers, chairs, hangers, etc. of height/length of 300mm and less, required for keeping the steel in position. For supporting horizontal reinforcement at heights, drawings for supports, spacers, chairs, hangers, etc. larger than 300mm, shall be prepared by the Contractor and got it approved from Employer. Payment shall be made for these supports as approved by the Employer, or as actually provided, whichever is less, as per the unit rate quoted for reinforcement.

7.8.2.5.5 No extra payment shall be made for modification of already embedded reinforcement, if required due to faulty fabrication or placement.

7.8.2.5.6 Dowels as required for completion of the work shall be provided by the contractor which will not be separately calculated for payment.

7.8.2.6 **Piling work**

7.8.2.6.1 The items of works are briefly described in the BPS. The various items in the BPS shall be read in conjunction with the corresponding sections in the Technical Specifications, including amendments, and additions, if any. The unit rate quoted for items shall include all the activities covered in the description of the item as well as all necessary operations described in the specification and any other specific requirements.

7.8.2.6.2 The unit rates shall also include all minor activities which are obviously and fairly intended, though may not have been clearly brought out in the description of items or in these documents, but are essential for the satisfactory completion of the work.

7.8.2.6.3 Unit rates shall also include for all safety measures as required by Codal provisions, local regulations, acts, bye-laws, etc. and mobilization of all plant, equipment, scaffolding, materials, skilled and unskilled labour, de-mobilisation after completion of work, supervision, establishing level and coordinates at each location by carrying levels from one established bench mark and distances from one set of grid lines furnished by the Employer.

7.8.2.6.4 Unit rate on per meter length basis for a particular diameter of pile shall remain unchanged irrespective of the actual length/depth of individual piles executed at any location

7.8.2.6.5 Unit rate for pile boring through all kind of soil, including weathered rocks, laterite, shell, hard rock shall be inclusive of cost of boring by approved method, bailing out all the pile bore spoils from the pile bore, keeping the bore hole free from bored material/debris etc. and disposing same along with the drilling mud up to a distance of 2 Kms., flushing the pile bore by fresh bentonite before concreting, collection of samples from bottom of pile bore, transporting to laboratory, testing and reporting of results including necessary materials, equipment and manpower.

7.8.2.6.6 Unit rate quoted for pile boring through soil including weathered rocks, laterite, shell, hard rock shall include shifting of plant and equipment from one pile location to another location, providing temporary casing as required and removal of the same after completing concreting. The quoted unit rate for boring/installation of pile shall also be inclusive of the empty boring and extra concreting required above the pile cut off level.

7.8.2.6.7 Unit rate for pile boring through soil including weathered rock / laterite shall also include chiseling, if any required, the chiseling through rock in the pile below socketing horizon up to the specified level shall be inclusive of bailing out the pile bore debris/spoils from the pile bore and disposing off the chiseled materials/debris along with the sludge/mud up to 2 kms., flushing the pile bore by fresh betonies before concreting, collection of samples from bottom of the pile bore, transporting to laboratory, testing and reporting of results.

7.8.2.6.8 Unit rate of pile boring shall include concreting in piles by tremie method only, cost of preparation of pile head and disposal of debris etc., resulting from breaking off of pile up to COL, up to a distance of 2 km.

7.8.2.6.9 Unit rates shall include for all quality assurance requirements, but not limited to providing for technical inspection, transportation of samples to laboratory, testing samples, maintaining and submitting all test records, etc.

7.8.2.6.10 The rate quoted for boring and installation shall be inclusive of performing point load test on the rock samples obtained from bore spoils during the chiseling operations, and shall be inclusive of transportation to laboratory, testing and reporting of the results.

7.8.2.6.11 Measurement for the item of boring through soil including weathered rock shall be done by linear measurement for the length bored from the pile cut off level or ground level whichever is lower

through soil/weathered rock up to termination /founding level as per drawing or actual length achieved of the pile in meters, up to second place of decimal.

7.8.2.7 Pile Integrity Test

The actual quantity of pile integrity test done shall be calculated in nos. and the unit rate quoted shall be include all necessary equipments, manpower, labor, materials, operations etc. required to complete the work as per clause 7.7.13 of this section. The payment shall only be made after successful completion of the job and submission of complete report for each no. of test.

7.8.2.8 Piled Foundation - Tests

The actual quantity of pile load test done shall be calculated in nos. and the unit rate quoted shall be include all necessary equipments, manpower, labor, materials, operations etc. required to complete the work as per clause 7.7.14 of this section. The payment shall only be made after successful completion of the job and submission of complete report for each no. of test.

APPENDIX 7.A1

FOUNDATION TYPES & USES

Soil Category	Allowable Foundation Type
1	Concrete Pad & Chimney/ Drilled Shaft Piled*/Rigid Frame Foundation**
2	Concrete Pad & Chimney/ Drilled Shaft Piled*/Rigid Frame Foundation**
3	Concrete Pad & Chimney/ Raft/ Drilled Shaft Piled*/Rigid Frame Foundation**
4	Concrete Pad & Chimney/ Drilled Shaft Piled*/Rigid Frame Foundation**

Note: Seismic zone coefficient, G=0.1 shall be considered.

* The bidder may propose any other proven type of piled foundation instead of Drilled Shaft Piled foundation except wooden pile. The bidder shall submit the design of the proposed type of piled foundation along with detailed design calculation, installation procedure with drawings, Quality Control procedure, Standards and Codes of Practices to be followed, advantages of selecting such type of piles, etc. with the bid. Reinforced concrete pile caps shall be used for all types of piles. Payments of all types of foundations shall be as per prices quoted in the Price Schedule.

** Foundations at high flood level area shall be rigid frame with multiple drilled or mechanically excavated cast-in-situ piled. The Contractor shall submit his proposed method of installation and Quality Control procedures to the Engineer prior to commencing his design. This is a **Hold Point**.

Due cognizance shall be taken of the setting level of the base of the tower relative to ground level, the maximum depth of flood water. Individual footings shall be interconnected by tie beams, which shall be adequate to resist lateral forces and hydrostatic pressure exerted by the flood water. A Cyclonic surge of 6m shall be considered for detailed design of tower and foundation for river crossing in the estuary.

As the location of river crossing towers are supposed to be submerged during most of year, temporary islands will be required to be built by the Contractor for foundation works of river crossing towers.

APPENDIX 7.A2

FOUNDATION STRENGTH FACTOR

Annex 7-A2 (1): Foundation Overload Factor: 400kV Quad Finch or equivalent Double Circuit Towers- Not used

The following overload factor shall be used to increase the ultimate tower reactions on the foundations for the design of the foundations:

Applied Loading Case	Overload Factor for Foundation for all Tower Type
All load case	1.35

Annex 7-A2 (2): Foundation Overload Factor: 400kV Twin Finch Double Circuit Towers - Not used

The following overload factor shall be used to increase the ultimate tower reactions on the foundations for the design of the foundations:

Applied Loading Case	Overload Factor for Foundation for Tower Type	
All load case	4DL	4D1, 4D25, 4D45,4DT60
	1.33	1.45

Annex 7-A2 (3): Foundation Overload Factor: 230kV Twin Mallard Double Circuit Towers (High Wind Zone) - Not used

The following overload factor shall be used to increase the ultimate tower reactions on the foundations for the design of the foundations:

Applied Loading Case	Overload Factor for Foundation for all Tower Type	
All load case	2DL	2D1, 2D25, 2DT6, 2D9
	1.23	1.35

Annex 7- A2 (4): Foundation Overload Factor: 230kV Twin Mallard Double Circuit River Crossing Towers (High Wind Zone) - Not used

The following overload factor shall be used to increase the ultimate tower reactions on the foundations for the design of the foundations:

Applied Loading Case	Overload Factor for Foundation for all Tower Type	
All load case	2DR	2DAX
	1.23	1.35

Annex 7- A2 (5): Foundation Overload Factor: 230kV Twin Mallard Double Circuit Towers (Medium Wind Zone)

The following overload factor shall be used to increase the ultimate tower reactions on the foundations for the design of the foundations:

Applied Loading Case	Overload Factor for Foundation for all Tower Type	
All load case	2DL	2D3, 2D25, 2DT6
	1.23	1.35

Annex 7- A2 (6): Foundation Overload Factor: 230kV Twin Mallard Four Circuit Towers

The following strength factors shall be used to increase the ultimate tower reactions on the foundations for the design of the foundations:

Applied Loading Case	Strength Factor	
	Tower Type	
	2QL	2Q15, 2Q30, 2QT6
Normal Condition, High Intensity Local wind condition	1.33	1.60
Security Condition	1.60	1.90

Annex-7.A2 (7): Foundation Overload Factor: 132 kV Single Grosbeak Double Circuit Towers (Narrow Base)

The following overload factor shall be used to increase the ultimate tower reactions on the foundations for the design of the foundations:

Applied Loading Case	Overload Factor for Foundation for all Tower Type
All load case	1.23

Annex 7- A2 (8): Foundation Overload Factor: 132kV Single Grosbeak Four Circuit Towers

The following strength factors shall be used to increase the ultimate tower reactions on the foundations for the design of the foundations:

Applied Loading Case	Overload Factor for Foundation	
	Tower Type	
	1QL	1Q15, 1Q30, 1QT6
All load case	1.23	1.35

The following strength factors shall be used to increase the ultimate tower reactions to get allowable load on the foundations for the design of the foundations:

Applied Loading Case	Strength Factor	
	Tower Type	
	1DL,1D1, 1QL	1D25, 1DT6,1Q15,1Q30,1QT6,1DR,1DAX
All Load Cases	1.23	1.35

APPENDIX 7.A3

NOT USED

APPENDIX 7.A4

GEOTECHNICAL PARAMETERS
(Tender Purposes only)

Parameter		Soil Category			
		1	2	3	4
Soil classification		Dense sand or very stiff hard clay	Medium sand or stiff clay	Loose sand or soft to medium clay	Very loose sand or very soft to soft clay
SPT "N" blows 1. Average SPT from existing ground level to 75% of length of pile in case of pile foundation 2. Average SPT of top 5 meter soil from existing ground level case of pad & chimney foundation		>20	<10-20	5-10	<5
Water level		At (depth of foundation + width of foundation) from EGL	At ground level		
Soil density	kN/m^3	16	8	7.5	7
Backfill density	kN/m^3	16	8	7.5	7
Concrete Density	kN/m^3	24	14	14	14
Allowable bearing pressure under ultimate applied loading	kN/m^3	CLAY 250	150	75	25
		SAND 350	250	120	80
Lateral earth pressure (for shallow foundation)	kN/m^3	Rankine's theory of earth pressure is applicable			
Frustum angle (degrees to vertical)		15	15	10	0

For sandy soil Ultimate skin friction = $K\ p_d\ \tan\delta\ A_s$ Bored piles δ Driven piles: Steel δ Concrete δ	 ¾ Φ 20° ¾ Φ	Where, K = lateral earth pressure coefficient; p_d = average effective overburden pressure; φ = angle of internal friction; A_s = surface area of pile shaft;
For clay soil Ultimate skin friction = $\alpha_2\ C_U\ A_s$	α_2 = 0.3 to 0.7	where α_2 = reduction coefficient; C_U = Undrained shear strength;

APPENDIX 7.A4 (Continued)
Minimum Factor of safety for Foundations:

Parameter	Requirement
Minimum factor of safety for pad & chimney and piles or drilled shafts i.e. Ultimate resistance to allowable load (For all types of soil categories)	1.5
Minimum percentage of ultimate uplift load **(without foundation strength factor)** to be resisted by submerged dead weight of piles & pile cap (For soil category 4 of pile foundation only)	28%

APPENDIX 7.A5

DETERMINATION OF DEPTH OF FIXITY, LATERAL DEFLECTIONAND MAXIMUM MOMENT OF LATERALLY LOADED PILES

7-1. Determination of Lateral Deflection at the Pile head and Depth of Fixity

7.1.1 The long flexible pile, fully or partially embedded, is treated as cantilever fixed at some depth below the ground level (see Fig. 2).

7-1.2 Determine the depth of fixity and hence the equivalent length of the cantilever using the plots given in Fig. 2.

Where $$T = \left(\frac{EI}{K_1}\right)^{\left(\frac{1}{5}\right)}$$

(k_1 is a constants given in Tables 1 below, E is the Young's modulus of the pile material in kg/cm2 and I is the moment of inertia of the pile cross-section in cm^4).

Note: Fig. 2 is valid for long flexible piles where the embedded length Le is ≥ 4R or 4T.

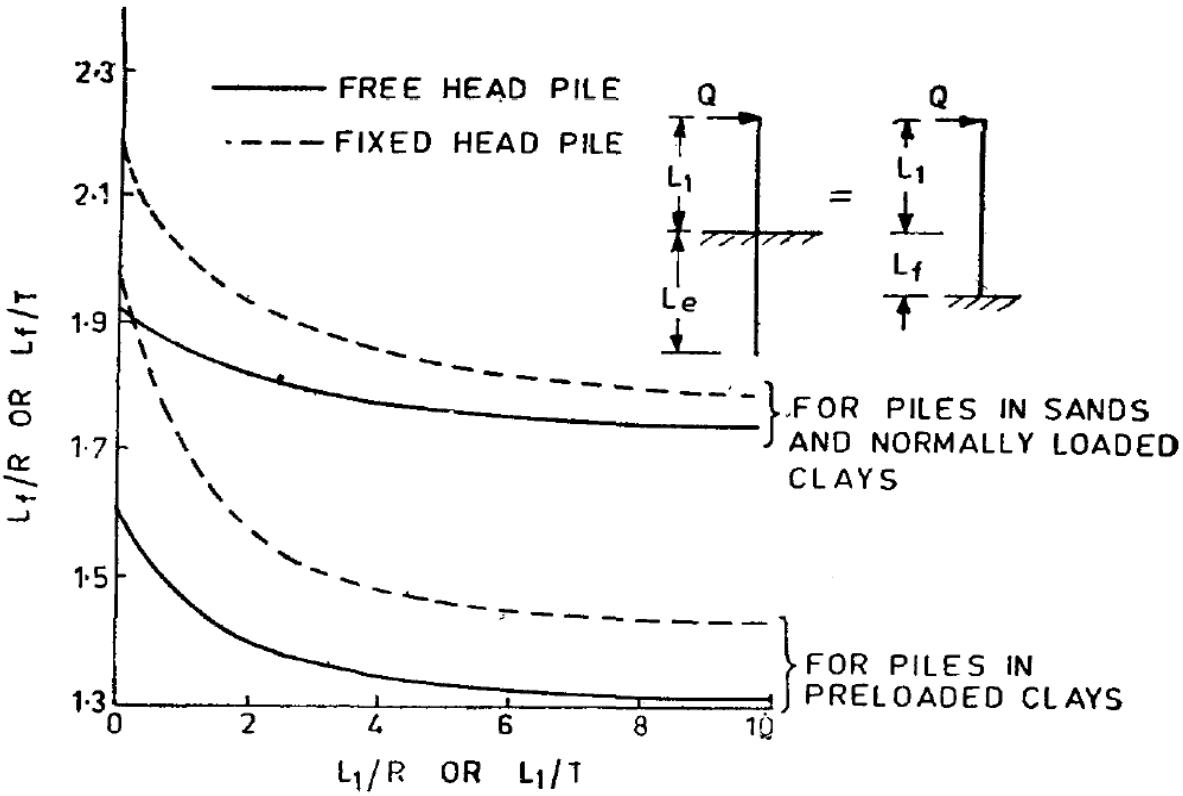

FIG. 2 DETERMINATION OF DEPTH FIXITY

K_1 is the constant of modulus of horizontal subgrade reaction, Values of k_1 are given below

Soil Category	Value of constant k_1 Kg/cm^3
Soil Category 2	1.00
Soil Category 3	0.525
Soil Category 4	0.146

Table 1: Values of constant k_1

7.1.3 Knowing the length of the equivalent cantilever the pile head deflection (Y) shall be computed using the following equations:

$$Y = \frac{Q(L_1 + L_f)^3}{3EI}$$

……for free head pile

$$= \frac{Q(L_1+L_f)^3}{12EI}$$

……..for fixed head pile

Here,
Y in cm
Q is the lateral load in kg

7.2. Determination of Maximum Moment In The Pile

7.2.1 The fixed end moment (M_F) of the equivalent cantilever is higher than the actual maximum moment (M) of the pile. The actual maximum moment is obtained by multiplying the fixed end moment of the equivalent cantilever by a reduction factor, m given in Fig. 3. The fixed end moment of the equivalent cantilever is given by:

$M_f = Q(L_1+L_f)$ …….for free head pile

$$= \frac{Q(L_1+L_f)}{2}$$ ……..for fixed head pile

The actual maximum moment (M) = m (M_f)

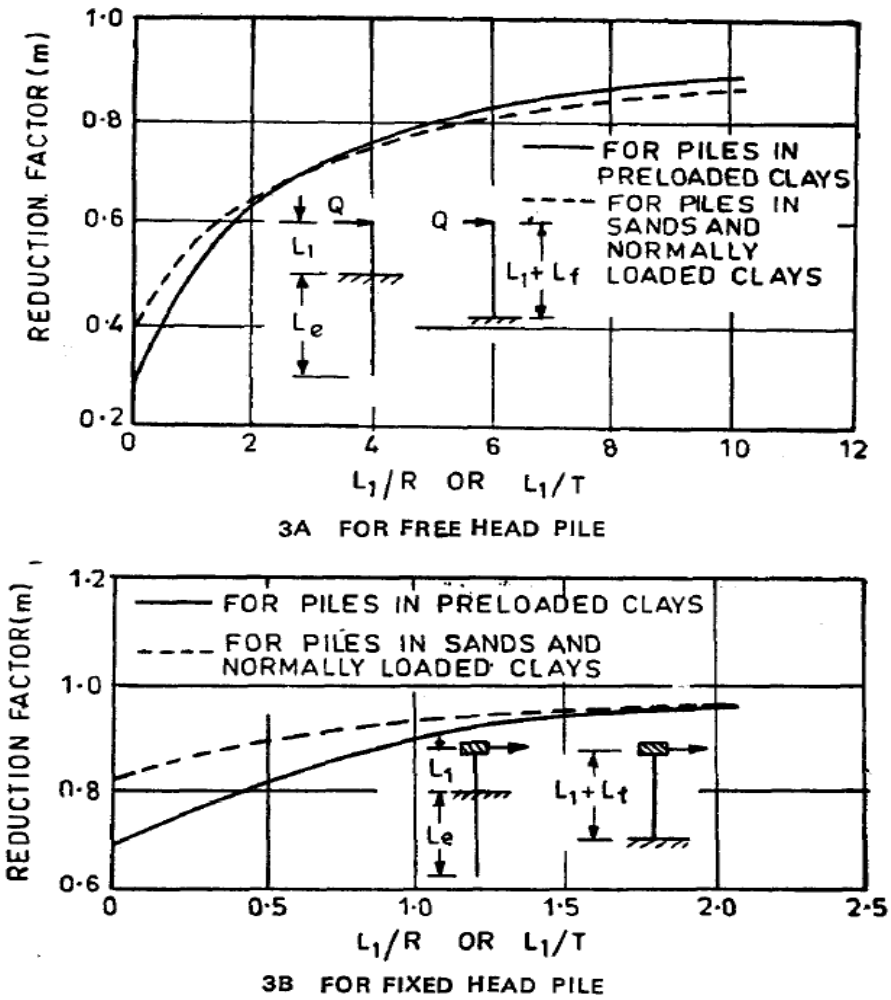

FIG.,3 DETERMINATION OF REDUCTION FACTORS FOR COMPUTATION OF MAXIMUM MOMENT IN PILE

7.2.2 Reinforcement of upper section of pile should be provided upto 1.25x L_f depth

APPENDIX 7.A6

CONCRETE MIX PARAMETERS

Grade of Concrete	Cement Type	Minimum Cement Content kg/m^3	Maximum Freewater/ cement ratio
C30	Ordinary Portland Cement (OPC) CEM I	370	0.5
C30	Portland Composite Cement (PCC) CEM II	370	0.5
C30	Sulphate Resisting Portland Cement (SRC)*	As per BSEN 197-1 CEMII/B-V	

Notes

1. Maximum nominal aggregate size 20mm.
2. For installation of drilled shaft piled foundations using bentonite slurries, minimum cement content shall be increased to 400 kg/m3
3. Slump range for cap and chimney is 50 mm to 100 mm and for pile 150 mm to 200 mm.

***** If required as per soil and ground water test report.

APPENDIX 7.A7

CONCRETE COVER

Reinforcement (mm)	Stub Steelwork or Reinforcing Designed as 'Stub' Steelwork (mm)
75	**150**

APPENDIX 7.A8

Chimney & Pile Cap

(i) The top of chimney of tower foundation shall beat least 450 mm above nominal ground level for new tower design. For pre-designed towers, existing stub drawings may require to be modified in this regard.

(ii) In case of pile foundation pile cap shall be at least 450 mm below nominal ground level for new tower design. For pre-designed towers, existing stub drawings may require to be modified in this regard.

APPENDIX 7.Bl

ENGINEERING DOCUMENTS TO BE SUBMITTED BY CONTRACTOR

Clause Reference	**Documents Description**	**Comment**
7.1.2	Installation Method Statement	
7.1.4.2	Drilled Shaft foundation Method Statement	
7.1.2	River Crossing Tower Foundations Method Statement	
7.4	Concrete Specification	
7.4.2	Potential Alkali Reactivity-Test Results	
7.4.4	Reinforcing Bar Couplers	
7.4.5	Spacers	Details of system
7.5.19	Working area reinstatement	Programme of work
7.6.6	Protection of Buried steelwork	Quality Control proposals
7.7.3	Reinforcement - test certificates	If requested
7.7.4	Inspection prior to concreting	Inspection record
7.7.5	Trial mixes – Test results	
7.7.6.1	Works cubes – Test results	
7.7.8	Foundation Incorrect setting,	Remedial Measure
7.7.8	Foundation Setting out-records	
7.7.9	Imported backfill – detail	
7.7.10	Foundation Tests – test proposal	
7.7.10	Foundation Tests – test results	
7.7.10	Integrity Testing – test records	If requested
7.7.14	Earth Resistance Tests – test records	
7.7.15	Protective coating – Routine tests	
7.7.15	Protection coatings – test records	If requested

APPENDIX 7.Cl

NOTIFICATION AND HOLD POINTS

Clause Reference	Notification Points	Hold Points
7.1.2		Method statement
7.1.4.2		Drilled Shaft - Method statement
7.2.3.1		Concrete Mix Design -Specification
7.4.2		Potential Alkali Reactivity
7.4.4		Reinforcing Bar Couplers
7.5.4	Use of Explosives	Use of Explosives
7.4.5	Spacers	
7.5.5		Epoxy bars site cutting
7.5.5	Straightening of bars	
7.5.13		Curing compounds
7.5.6	Concrete Trial mixes	
7.5.12	Joints	
7.6.4		Steelwork and stub-concrete Interface
7.5.17	Backfilling	
7.6.6		Protection of buried steel work
7.6.3	Epoxy Coating repair	
7.7.8		Foundation Setting remedial measure
7.7.4	Inspection prior to concreting	
7.7.10		Foundation test program
7.7.6.1	Concrete cube tests	
7.7.11		Concrete pad & chimney foundations – Design tests
7.7.12		Drilled shaft foundations tests
7.7.13	Integrity testing	Integrity testing - test proposals
7.7.14	Earth resistance tests	Earth resistance tests –Test proposals
7.7.15	Protective coating tests	Protective coating – test proposals

APPENDIX 7.Dl

REFERENCE STANDARDS

The reference standards and other documents referred to in this Section of the Specification are listed below:

BS EN 197-1:	Specification for Portland cement
BS 183:	Specification for general purpose galvanised steel wire strand
BS EN 10244-2:	Specification for testing zinc coating on steel wire & for quality requirements
BS EN ISO 1461:	Specification for hot dip galvanised coatings on iron & steel articles
BS EN 12620:	Specification for aggregates from natural sources of concrete
BS EN 10083,4,5:	Specification for wrought steel for mechanical and allied engineering purposes
BS EN 10088	
BS EN 10089	
BS 1305:	Specification for batch type concrete mixers
BS 1377:	Method of tests for soils for civil engineering purposes
Part 9:	In-situ tests
BS EN 12350-1:	Testing concrete
	Method of sampling fresh concrete on site
BS EN 12390-3:	Method of determining compressive strength of concrete
BS EN 13600:	Specification for high conductivity copper tubes for electrical purposes
BS EN 1652,3,4:	Specification for rolled copper and copper alloys, sheet, strip and foil
BS EN 1057:	Specification for copper and copper alloys. Tubes
BS EN 12449	
BS EN 12163, 4,7:	Specification for wrought steel for mechanical and applied engineering purposes.
BS 3643:	ISO Metric screw threads
BS 3892:	Pulverised - fuel ash
Part 1:	Specification for pulverised - fuel ash for use Alith Portland cement
BS 4027:	Specification for sulphate - resisting Portland cement
BS 4190:	Specification for ISO metric black hexagon bolts, screws and nuts
BS 4449:	Specification for carbon steel bars for the reinforcement of concrete
BS 8666:	Specification for scheduling, dimensioning, bending & cutting of steel reinforcement for concrete
BS EN ISO 4066	
BS 4483:	Specification for steel fabric for the reinforcement of concrete
BS 8500-1,2:	Concrete
BS EN 206-1	Guide to specifying, concrete
	Methods for specifying concrete mixes
	Specification for the procedure to be used in producing, and transporting concrete
	Specification for the procedure to be used in sampling, testing and assessing compliance of concrete
BS 7079	Visual Assessment of surface cleanliness
Part A1	Specification rust grades and preparation grades of uncoated steel substrates and steel substrates after overall removal of previous coatings.
BS ISO 14654:	Fusion bonded epoxy coated carbon steel bars for the reinforcement of concrete
	Specification for coated bars
BS ISO 14656:	Specification for coatings
BS 7884:	Specification for copper and copper cadmium stranded conductors for overhead electric traction and power transmission systems.
BS 8004:	Code of practice for foundations
BS 8081:	Code of practice for ground anchorage
BS EN 1537	
BS 8110:	Structural use of concrete

Part 1:	Code of practice for design and construction
BS EN 10025:	Specification for hot rolled products of non-alloyed structural steels and their technical delivery requirements
ASTM C33:	Specification for concrete aggregates
ASTM C227:	Standard Test Method for Potential Alkali Reactivity of cement/aggregate combinations (Mortar bar method)
ASTM C289:	Standard Test Method for Potential Alkali Silica Reactivity of Aggregates (chemical method)
IEC 61773:	Overhead lines – Testing of foundations for structures

ANNEXURE - B

PILE DATA SHEET

1. Reference No. Location (Co-ordinates)_____ area.

2. Sequence of Piling

3. Pile diameter & Type

4. Working level (Platform level)

5. Cut off level (COL)

6. Actual length below COL

7. Pile termination level

8. Top of finished concrete level

9. Date and time of start and completion of boring

10. Depth of Ground water table in the vicinity

11. Type of strata at pile tip

12. Method of boring operation

13. Details of drilling mud as used :

i) Freshly supplied mud

liquid limit
sand content
density
marsh viscosity
Swelling index
pH value

ii) Contaminated mud
density
sand content

14. SPT, N values in soil (from the nearest bore hole). UCS value in rock (from the nearest bore hole).

15. Chiseling if any, from....m to.....m.

16. Date and time of start and completion of concreting

17. Method of placing concrete

18. Concrete quantity :

    Actual
    Theoretical

19. Ref. Number of test cubes

20. Grade and slump of concrete

21. Results of test cubes

22. Reinforcement details :

Main Reinforcement	Stirrups : Type
No._____	No._____
Dia_____	Dia_____
Depth_____	Spacing_____

23. Any other information regarding constructions, delay and other interruption to the sequence of work.

NOTE : The above details are required to be furnished by the Contractor before starting the installation work.

8. Towers

8.1 Scope

8.1.1. The scope includes design, testing, fabrication, supply and erection of towers on the basis of tender specification. Requirement of tower design, whether new design require or earlier designed tower will be used, is specified in the **Annex**.

8.1.2 In case the proto type load tested or earlier designed towers and poles are used then the Employer shall provide structural/erection drawings, available shop drawings, and bill of materials of towers, poles and their extensions as required to the Contractor after placement of award, in sequence, suiting the project requirement, upon written request of the Contractor. The Contractor has to satisfy themselves regarding correctness of the available drawings.

8.1.3 Regarding the proto type load tested or earlier designed towers, if the Contractor needs to prepare any additional structural and shop drawings or make any correction of existing drawings, that have to be prepared by the Contractor without any additional cost. In such case, the Contractor has to submit relevant documents/drawings for approval of the Employer.

8.1.4 In case the proto type load tested or earlier designed towers and poles are used then the Bidders are requested to inspect the available drawings in the Design Dept. of POWER GRID to satisfy them regarding the extent of available drawings. Bidders are required to propose the tower/pole materials from a manufacturer who will use the same material standard as mentioned in the drawings.

8.1.1 Classes of Towers

Reference shall be made to **Annex 8-2** for the classes of tower required.

8.1.2 Designation of Tower Types

Reference shall be made to **Annex 8-3** for the designation and use of the different tower types.

8.1.3 Standard Height Towers

All standard height towers are those designed to support the conductors at the defined clearance above designated ground under the specified ultimate limit state system loading assuming such towers are at the same level on level ground and at the standard span apart. The Standard span length is shown in **Annex 8-5**.

Unless specified to the contrary, after taking account of the length of the insulator set all standard height towers shall be arranged so that the point of attachment or suspension of the phase conductors above the ground shall be the same for all tower types.

8.1.4 Extensions

8.1.4.1 Where specified each type of tower shall be designed to allow for variations in height. Towers with any specified combination of extensions to the standard height tower, shall be capable of

carrying all required phase conductors, earthwires, insulator sets and fittings under the specified system loading.

8.1.4.2 Reference shall be made to the **Annex 8-4** for the range and type of extensions required. Tower with different leg extensions shall be used as per requirement of the route.

8.1.4.3 Where individual leg extensions are specified for lattice steel towers they shall be directly inter-connectable and fully compatible with the basic tower body and all specified body extensions.

8.1.5 Span Criteria

8.1.5.1 The span lengths specified in **Annex 8-5** shall be deemed to be the horizontal distance between centrelines of adjacent support. When a span in excess of the specified maximum span is unavoidable, advice on the application should be obtained from the Engineer.

8.1.5.2 All angle towers when used with the corresponding maximum angles of deviation and all intermediate type towers shall be used so that the sum of the two adjacent spans stated in **Annex 8-5** is not exceeded, provided that no single span length exceeds the specified maximum. Designs shall allow for the adjacent spans of the maximum specified length with one of the spans at the maximum allowed for a single span.

8.1.5.3 Section type tower may be used at straight line positions where necessary for uplift conditions or for sectioning and tensioning of the phase conductors and earthwires in a straight run of transmission line route.

8.1.5.4 Angle towers shall be suitable for minimum weight spans combined with maximum wind span through the full angular range of line deviations for which the angle towers are designed.

8.1.6 Minimum Conductor Weight at Intermediate Tower

The total weight supported by any intermediate tower suspension insulator set shall not be less than the specified (see **Annex 8-5**) weight of the corresponding phase conductors in the two adjacent spans. This condition shall apply under the specified loading conditions.

8.1.7 Angle Towers

For angle towers at the mean angle of deviation, the mean horizontal separation between circuits shall not be less than that of an intermediate type support.

For bundled phase conductors the phase conductor attachment points on each crossarm/gantry shall be arranged to ensure that the nominal horizontal separation between sub-conductors at the tension joint (dead end), is not reduced by more than 25 mm.

8.1.8 Terminal Towers

Terminal towers shall provide the corresponding separation at the specified line entry. Additional phase conductor attachment points shall be provided at the specified angles of entry. Additional

crossarms for down-leads or for use in junction arrangements with full phase tension shall be provided when specified.

8.2 Design

8.2.1 General

8.2.1.1. Towers shall have the general arrangements and configurations shown in the drawings included with the Specification. They shall be designed to resist the specified system loading taking into consideration the required strength coordination factors. Clearances between live parts and supporting steelwork and between the phase conductors and ground or other obstacles shall be as specified.

8.2.1.2. All tower designs shall be such as to facilitate inspection, painting, maintenance, repairs and operation with the continuity of supply being the prime consideration.

8.2.1.3. The design shall be such that the number of different parts shall be as few as possible to facilitate transport, erection and inspection. The maximum weight of the heaviest single member should be limited to that within the normal lifting capability of the proposed erection equipment.

8.2.1.4. Main leg members of lattice steel towers shall be formed of the maximum single lengths appropriate to the body or leg extensions, and shall not without the Engineer's approval, incorporate additional spliced sections.

8.2.1.5. For lattice steel towers a fully triangulated system of bracings shall preferably be adopted. If full triangulation is not adopted, the overall stability and secondary bending, stresses must be considered in the design.

8.2.1.6. Where fabrication processes employed adversely affect the material properties, or introduce zones of high stress concentration the overall design of the structures shall take such factors into account.

8.2.1.7. Crossarms shall be so arranged that they can be disconnected in the plane of the longitudinal face of the tower without disturbing any members forming part of the tower body.

8.2.1.8. All panels below the proto type test tower height must be of K-braced type.

8.2.2 Attachments to Towers

The attachment of phase conductors, earthwires and erection/maintenance brackets shall be undertaken as follows:

(a) Intermediate Lattice Steel Towers

i) Suspension insulator set and earthwire attachments shall be of an approved swivel or shackle arrangement;

ii) Adjacent to and either side of all suspension insulators set attachment points, additional maintenance points shall be provided, capable of resisting the specified construction and maintenance (C&M) load;

iii) Adjacent to the earthwire suspension set attachment point, an additional maintenance point shall be provided, capable of resisting the specified C&M load;
iv) At each tower body crossarm connection point (bottom chord level) maintenance plates /brackets shall be provided for the attachment of rigging blocks, capable of resisting the specified C&M load;
v) Where it is proposed to erect complete sections of the tower by crane or helicopter then permanent lifting points shall be provided.

(b) Angle/Tension Lattice Steel Tower

i) Tension insulator set attachments shall be of an approved swivel or shackle arrangement;
ii) Adjacent to and either side of all tension insulator set attachment points, additional maintenance points shall be provided, capable of resisting the specified C&M loading. The additional maintenance points shall provide the necessary mountings for stringing and maintenance equipment;
iii) Adjacent to all tension insulator set attachment points, a vertical maintenance attachment point shall be provided, capable of resisting either the specified C&M loads or that imposed by the use of a conductor stringing platform;
iv) Adjacent to the earthwire tension set attachment point, an additional maintenance point shall be provided, capable of resisting the specified C&M loads;
v) At each tower body crossarm connection point (bottom chord level) maintenance plates / brackets shall be provided for the attachment of rigging, blocks, capable of resisting the specified C&M loads.

(c) River Crossing Towers

i) Suspension insulator set and earthwire attachments shall be of an approved swivel or shackle arrangement;
ii) Adjacent to and either side of all suspension insulators set attachment points, additional maintenance points shall be provided, capable of resisting the specified construction and maintenance (C&M) load;
iii) Adjacent to the earthwire suspension set attachment point, an additional maintenance point shall be provided, capable of resisting the specified C&M load;
iv) At each tower body crossarm connection point (bottom chord level) maintenance plates /brackets shall be provided for the attachment of rigging blocks, capable of resisting the specified C&M load;
v) Where it is proposed to erect complete sections of the tower by crane or helicopter then permanent lifting points shall be provided.

(d) Anchor Tower

i) Tension insulator set attachments shall be of an approved swivel or shackle arrangement;
ii) Adjacent to and either side of all tension insulator set attachment points, additional maintenance points shall be provided, capable of resisting the specified C&M loading. The additional maintenance points shall provide the necessary mountings for stringing and maintenance equipment;
iii) Adjacent to all tension insulator set attachment points, a vertical maintenance attachment point shall be provided, capable of resisting either the specified C&M loads or that imposed by the use of a conductor stringing platform;
iv) Adjacent to the earthwire tension set attachment point, an additional maintenance point shall be provided, capable of resisting the specified C&M loads;

v) At each tower body crossarm connection point (bottom chord level) maintenance plates /brackets shall be provided for the attachment of rigging blocks, capable of resisting the specified C&M loads.

All tower general arrangement drawings and/or erection diagrams shall clearly indicate the safe working, load capacities of all maintenance points.

8.2.3 Stubs

Stubs for the standard height tower, tower body and leg extensions shall be of the same design. Unless specified to the contrary only one design of stub shall be permitted for each type of tower and the stubs shall be identical for all four legs. Two different type of stub design may require for rigid frame foundation and pile foundation. No extra payments shall be made for such two type of stub. For details of the cleat design, reference shall be made to 'Foundations' Section.

The size of stub leg members shall not be less than the corresponding connecting tower leg members.

8.2.4 Design Criteria

Unless otherwise mentioned in the bidding documents, tower structural loading shall be in accordance with ASCE 74-2009 and tower design shall be in accordance with ASCE 10-97/ASCE 10-15.

Loading Conditions	Wind Speed	Coincident Temperature	Design Aspect
Normal Condition (DL)	50% of FL	50˚C	Electrical Clearance of structure (PFC)
Normal Condition (DL)	15.6 m/s	50˚C	Electrical Clearance of structure (LIC)
Normal Condition (DL)	100% of FL	5˚C	Structure design
High Intensity Wind Condition	100% of FL	5˚C	
Security Condition	50% of FL	5˚C	
Safety condition	15.6 m/s	5˚C	

Note: DL - Damage Limit, FL - Failure Limit, PFC - Power Frequency Clearance, LIC - Lighting Impulse Clearance.

Wind speed (Failure Limit), weather load factor and exposure category shall be considered as mentioned in **Annex 8-1.**

8.2.5 Load Case and Load Combination

8.2.5.1 Reliability Load Cases

Reliability load cases shall be applied to structure to design up to the failure limit (FL). The conductor shall be considered under "creep" condition.

8.2.5.1.1 Normal Conditions

The towers shall be designed for the following loads considered to be applicable simultaneously.

a) Vertical Loads

Dead weight of tower, weight of insulators and all other fittings, actual dead weight of conductor, earthwire and OPGW of specified weight span lengths in **Annex 8-5**. V_{max} for maximum weight span with following load factor and V_{min} for minimum weight span with following load factor shall be considered.

Description	Load Factor
Maximum weight span	1.25
Minimum weight span	0.9

b) Transverse Loads

Transverse load due to wind (wind angle 0°, 22.5°, 45°, 67.5° and 90°) on earthwire/OPGW, conductor, tower members, insulator and all other fittings and transverse component of maximum working tension of earthwire/OPGW & conductor due to maximum horizontal deviation angle of line. Load factor for horizontal tension of earthwire/OPGW & conductor shall be considered 1.25.

c) Longitudinal Loads

For suspension towers 3% and for angle towers 10% of conductor or earthwire/OPGW ultimate tensile strength shall be considered as unbalanced longitudinal load. For terminal tower, maximum working tension of conductor shall be considered as unbalanced longitudinal load. Load factor for conductor tension shall be 1.25.

8.2.5.1.2 Special Normal Condition

a) Eccentric Loads

Towers shall be checked for eccentric loading caused by the conductors and earthwire/OPGW strung on one side of the tower. In checking the tower for this kind of loading the loads mentioned above for vertical, transverse and longitudinal loads shall be considered for three phase conductors and earthwire/OPGW on one side of the tower in addition to wind on tower and weight of tower.

For terminal towers, torsion loads caused by the unbalanced longitudinal working tension due to one circuit conductors and earthwire/OPGW strung shall be considered.

Same load factors mentioned above for Normal Condition shall be applicable for Eccentric Loads also.

b) High Intensity Local Wind Loadings

High intensity local wind is required to be considered by applying wind at 0°, 22.5°, 45°, 67.5° and 90° on tower body. A load factor of 2.0 on wind pressure is required to be considered for this case. It shall be assumed that there is no wind on conductor.

8.2.5.2 Security Loading

The towers shall be designed for the following loads considered to be applicable simultaneously.

a) Vertical Loads

Dead weight of tower, weight of insulators and all other fittings, actual dead weight of conductor, earthwire and OPGW of specified weight span lengths in **Annex 8-5.**V_{max} for maximum weight span with following load factor and V_{min} for minimum weight span with following load factor shall be considered.

Description	Load Factor
Maximum weight span	1.25
Minimum weight span	0.9

b) Transverse Loads

Transverse load due to wind (50% of Failure Limit wind at angle 0°) on earthwire/OPGW, conductor, tower members, insulator and all other fittings and transverse component of maximum working tension of earthwire/OPGW & conductor due to maximum horizontal deviation angle of line. Load factor for horizontal tension of earthwire/OPGW & conductor shall be considered 1.25.

c) Longitudinal Loads

For intact point, unbalanced tension is similar to normal condition.

For broken point, unbalanced longitudinal tension shall be considered as per criteria given below:

Tower Type	Conductor Tension	Residual Static Load Factor		Load Factor	Broken Wire Assumption
Suspension/ Heavy suspension	Conductor tension at security condition	String Length	Factor	1.25	1 earthwire or 1 phase (all sub-phase) is broken
		< 1m	1.0		
		1m< but < 2m	0.7		
		> 2m	0.6		
Angle tower		1.0		1.25	1 earthwire and 1 phase (all sub-phase) or 2 phase broken (all sub-phase) on the same side are broken

8.2.5.3 Safety Loading

a) Structure Erection

The specified construction and maintenance loading shall be applied to all phase conductor and earthwire/OPGW attachment points in the combinations stated.

Where appropriate that loading and/or their individual components shall also be applied to the corresponding maintenance points e.g. the vertical component shall be applied to vertical maintenance attachment points, whilst the longitudinal is distributed to the horizontal maintenance plates.

All members with an inclination of 40 degrees to 90 degrees to the vertical, shall be checked for the effects of point loading of 1.5kN at its most onerous position. No other loading shall be considered under this condition.

It is the Contractor's responsibility to consider all constructional loading due to his proposed method of tower erection and conductor stringing. Where necessary, any additional loading due to these methods shall be considered in the design of the tower and especially the specified maintenance, lifting or attachment points. Under these conditions a minimum load factor of 1.5 shall be considered.

b) Ground Wire and Conductor Installation (Stringing)

1. Only angle and sections towers shall be subjected to this load.
2. For transverse and vertical loads, wind (15.6 m/s) on the wires and structure shall be considered. Use the lowest temperature (5° C) that can be expected to occur during stringing operations.
3. The towers shall be designed for square rigging load assuming stringing tension working vertically and longitudinally simultaneously at the crossarm tip.
4. For transverse wind loads, maximum design wind span with a load factor of 1.0 shall be considered.
5. Longitudinal and vertical load factor shall be 2.0 for phase under stringing operation; this factor shall be 1.5 for strung phases.

Different load cases shall be considered based on sequence of stringing.

c) Fall Protection Loads

Two person's fall arrest factored impact loading (21kN) at any crossarm tip point shall be considered. Simultaneous vertical load due to conductor and loads due to conductor tension shall have load factor 2.0.

In other attachment points load factor 1.5 shall be considered on conductor tension and vertical load.

d) Dropped conductor

In this case weight span shall be considered 1.5 times of maximum weight span with a load factor of 1.5 for all loads at that attachment point. In other attachment points load factor 1.5 shall be considered on conductor tension and vertical load.

8.2.6 Downlead Tensions

The maximum downlead tension shall be as specified in **Annex 8-6**. However, for the purpose of tower design they shall be assumed to be zero except where the vertical load component increases the stresses in tower members. These tensions shall be assumed to apply at both ends on low duty tension insulator sets.

8.2.7 Down Droppers to Substation Equipment

The design of down droppers shall take into account the limiting strength of substation equipment specified in **Annex 8-6**.

8.2.8 Allowable Ultimate Unit Stresses

The allowable ultimate unit stresses used in the determination of the nominal strength of support members shall be based on the following criteria:

a) For lattice steel tower shall be based on the recommendations contained in BS 8100-3 or ANSI /ASCE Std. 10-15. For ANSI/ASCE Std. 10-15 the appropriate reference stress levels shall be based on the values specified in BS 5950, and as summarized below:

Grade	Reference Stress Level(N/mm²)	Nominal Thickness
S235JRG2	235	≤ 16 mm
	225	> 16 ≤ 40mm
S275JR	275	≤ 16mm
	265	> 16 ≤ 40mm
S355JO	355	≤16mm
	345	> 16 ≤ 40mm

b) For lattice steel tower where the appropriate design stresses are not contained in the specified code of practice/manual, reference shall be made to BS 5950.

8.2.9 Member Design Criteria

8.2.9.1 The maximum allowable slenderness ratios for members of lattice steel towers shall be

For leg members, crossarm chords	120
For other load-bearing compression members	200
For secondary bracings	250
For tension only members	350
For angles with slenderness ratios measured about their x-x and/or y-y axis	200

8.2.9.2 Secondary bracings shall be designed in accordance with the requirements of BS 8100-3.

8.2.9.3 Members shall be of such size, shape and length as to preclude damage or failure from vibration or stress reversal, including the detailing of the connections.

8.2.9.4 The minimum angle between main members and diagonal members as well as between bottom and upper member of crossarms shall be 15°.

8.2.9.5 The minimum thickness and diameter of material used in members and bolts shall be in accordance with the requirements of **Annex 8-7**.

8.2.10 Bolted Joints

8.2.10.1. Where appropriate all metal parts shall be secured with bolts and nuts with single spring washers. All nuts and bolts shall be in accordance with clause 8.3.3 unless specified to the contrary.

8.2.10.2. When in position all bolts shall project through the corresponding nuts by at least three threads for brazing, but such projections shall not exceed 10 mm. No screwed threads shall form part of a shearing plane between members.

8.2.10.3. The nuts of all bolts attaching phase conductor insulator sets, earthwire sets, maintenance brackets/plates, access ladder brackets, fall arrest system attachment brackets shall be locked in an approved manner preferably by locknuts.

8.2.10.4. The diameter of bolts used for towers shall be as mentioned in **Annex 8-7**for new design. For existing design, bolt sizes are mentioned in the relevant approved design drawings.

8.2.10.5. The bolts of any one diameter in a tower shall be one grade of steel.

8.2.10.6. Leg members shall be joined in such a way that electrical continuity is maintained to ground.

8.2.11 Electrical Clearances - Live Metal and Earthed Steelworks

Minimum clearance between live metal and earthed steelwork shall be in accordance with the requirements of **Annex 8-9**.

8.2.12 Downlead Clearances

The clearance in still-air between down leads shall be in accordance with the requirements of **Annex 8-9**. In exceptional circumstances and with the approval of the Engineer, under conditions of maximum (opposing) conductor swing and sag, the clearance may be reduced to the values specified in **Annex 8-9**.

8.2.13 Anti-Climbing Devices

8.2.13.1. Each support shall be fitted with an approved type of anti-climbing device as specified in **Annex 8-10**. The height of the anti-climbing device shall be adjustable and shall be within the limits specified in the **Annex 8-10**.

8.2.13.2. Where specified the anti-climbing device shall be provided with a hinged section where access for personnel is required. The hinged section shall be capable of being bolted and locked in the closed position with either a bolt, nut and locknut or a padlock. In the open position, no projection to impede safe access shall be permitted.

8.2.13.3. In no case shall an anti-climbing device be installed where it can be bypassed from a side slope or internal bracing.

8.2.13.4. Barbed wire type anti-climbing devices shall comply with the following requirements:

(a) Barbed wire shall be of the mild steel type with high security long barbs 15 mm long set at 50 mm spacing, but in all other respects the barbed wire shall comply with BS 4102, Section 4;
(b) For lattice steel towers the minimum distance between strands or between strands and horizontal tower member/pole sections shall not be less than 150 mm;
(c) No unprotected space greater than 230 mm across shall be left inside the device;

(d) Spacers shall be fitted at 1.5 m intervals and shall be attached to tower members where possible;
(e) Normally 5 strands of barbed wire are required outside the tower face and 3 strands inside;

8.2.13.5. Spiked type anti-climbing devices shall comply with the following requirements:

(a) The minimum spike diameter shall not be less than 10 mm, and shall project horizontally 50 mm and curve vertically down by 40 mm.
(b) Where spikes are bolted to the support frame the spike threads must be clenched after installation.

8.2.14 Livestock Guards

8.2.14.1 Means shall be provided on all lattice steel towers and tower extensions to avoid the risk of livestock being caught between tower members and being injured.

8.2.14.2 Tower members near the around shall be sufficiently robust to avoid being damaged by livestock. To enable supplementary livestock guards to be added, spare holes, normally 17.5 mm diameter and 300 mm apart, shall be provided on each face of the main leg members and the appropriate faces of bracing members, for a distance of approximately 1200 mm from ground level.

8.2.15 Bird Guards

Where specified bird guards of an approved type shall be fitted to intermediate towers fitted with suspension insulator sets. The bird guard shall either comprise a saw-tooth plate, or a length of earthwire/OPGW suitably de-stranded and splayed out at each end and clamped to the cross arm member.

8.2.16 Bird Flight Diverters/Flappers

The bird flight diverters/flappers of an approved type shall be installed on the line (earth-wire / OPGW or/and phase wires) for a length of 500m either side of the river crossings or large waterbodies and any additional locations required by Environmental study (Avian protection plan) and IEE. Bird divertors shall be spaced at 10m intervals. The bird divertors must be an internationally accepted, robust design of contrasting colour, that reflects UV light, glows in the dark, and guaranteed for at least 5 years.

8.2.17 Access Facilities

Each support shall be fitted with approved access facilities as specified in **Annex 8-10**. The following requirements for specific types of access facilities shall apply as appropriate.

a) Step Bolts

i) Step bolts shall be fitted between specified levels at 380 mm spacing;
ii) On double circuit towers they shall be fitted on the right hand leg on both transverse faces; for single circuit towers they shall be fitted on the right hand leg on one transverse face;
iii) The first step bolt below each cross arm or gantry shall be located on the transverse face of the leg, and all remaining step bolts shall be fitted, alternatively on the remaining of the support;
iv) On terminal and junction towers, provision shall be made for fitting of step bolts on all legs;

v) Step bolts shall not be less than 16 mm diameters, fitted with nut, washer and nut and shall project not less than 200 mm from the support when fitted;
vi) For steel poles, removable step bolts or step brackets in accordance with the requirements of (v) shall be fitted. The step bolt brackets shall be permanently attached to the pole;
vii) Where support legs are fabricated from solid round sections, clamp type steps shall be provided at similar spaces and projection as step bolts.

b) Ladders

i) Ladders shall be fitted between specified levels, support faces and either externally or internally;
ii) Ladders shall be in accordance with BS 4211, 350 mm between internal faces and 300 mm rung spacing;
iii) Rest platforms shall where specified be fitted at approximately 10m height increments with the rest platform 850 mm x 850 mm square and fitted with a guard rail (1000 mm above the platform), intermediate rail and toe board (projecting 100 mm);
iv) Ladders shall project 1100mm above platforms, unless other hand holds are provided and shall be between 150 to 230 mm from the platform where side access to the platform is provided.

c) Fall Arrest Systems

i) Fall arrest system shall be in accordance with the requirements of BS EN 360;
ii) The system shall be either a guided type fall arrester on a rigid anchorage line to BS EN 353-1, or a guided type fall arrester on a flexible anchorage line to BS EN 353-2.

d) Work Platforms

i) Work platforms shall be provided with hand rails as detailed in clause (b) iii);
ii) Platforms shall be designed for a transient load of 1.5 kN vertically concentrated load over any square with a 300 mm side, plus a 1.5 kN/m² vertically distributed load applied simultaneously to produce the worst loading condition.
iii) Flooring for platforms shall be the open type metal in accordance with BS 4592 and BS EN ISO 14122-1 to 3.

8.2.18 Danger and Identification Plates

All towers shall be fitted with danger and identification plates as specified in **Annex 8-10**.

8.2.19 Earthwire Bonding

8.2.18.1 Attachment holes for the connection of earthwire bonds shall be provided adjacent to the earthwire attachment point.

8.2.20 Earthing of Towers

8.2.19.1 Attachment holes for the connection of the ground earthing conductor shall be provided on all lattice towers standard heights adjacent to the stub connection, leg and body extension and cleats of stubs.

8.2.19.2 The maximum value of the earthing resistance shall be as mentioned in ‘Foundation’ Section.

8.2.19.3 The Contractor shall undertake preliminary soil resistivity measurements along each line route as soon as possible after award of the contract. The number and location of test points as well as the testing method shall be agreed with the Engineer.

8.2.19.4 In the presence of the Engineer, the Contractor shall measure the electrical footing resistance to earth of each tower before earth conductors are erected. These measurements shall be recorded by the Contractor in the form of a tower footing earth resistance profile of an approved type.

8.2.20.5 The following materials or their equivalents shall be used:

(i) Steel earthing rods shall be clad with 99.9 percent electrolytic pure copper molecularly bonded to the steel, with a minimum thickness of 0.35 mm. The earthing conductor at the ground interface and at the connection to the tower shall be protected against corrosion.

(ii) Minimum length of earthing rods shall be 3m. Provisions shall be made for coupling the rods to extend their length, if necessary. A bronze or brass bolted clamp shall be provided for connecting the earthing cables to the earthing rods.

(iii) Earthing cables (counterpoise), made of galvanised steel wire, with a diameter of 12 mm.

(iv) Connection of the counterpoise to the tower steelwork to be made by means of a compressed lug and two galvanized bolts and nuts, washers and spring washer on the tower stub at least 500 mm above the foundation surface. The minimum diameter of the bolts shall be 12 mm. The holes in the leg/stub steelwork shall be factory drilled prior to galvanizing.

(v) All mild steel used in the manufacture of earthing rods shall comply with the requirements of BS EN 10083 etc.: (minimum strength 600 N/m).

(vi) Phosphor-bronze used in the manufacture of earthing rod couplings shall comply with the requirements of BS 12163 etc.

(vii) All compression fittings shall be manufactured from electrolytic tough pitch high conductivity copper, complying with the requirements of BS 13600 and BS EN 1057 and 12449, designation C101.

(viii) Earthing conductors shall be in accordance with the following requirements:

e. Copper strip to BS EN 1652, 1653 and 1654, Grade C101 or C102, minimum cross sectional dimensions 20 mm x 3 mm;

f. Hard drawn copper strand to BS 7884, minimum overall diameter 10.65 (7 x 3.55 mm);

The depths of the upper ends of earthing rods and the depth of buried earthing cables shall not be less than the following values:

Cultivated (soft) soil:	800 mm
Normal soil:	500 mm
Rocky ground:	150 mm

Where the measured tower footing resistance is higher than the value mentioned in 'Foundation' Section, towers shall be earthed using one of the systems detailed below:

Type A

Each tower shall be earthed at two diagonally opposed legs. The earthing rods, one per leg, shall be hammered vertically into the soil to a depth of 3m at a minimum distance of 5m from the footing, and shall be connected to the tower legs by earthing counterpoise cables.
This type of earthing system shall be generally used where ground conditions are favourable, i.e. in cultivated (or soft) soil.

Type B
Installation of earthing rods as described for Type A, but with one 3m rod and earthing counterpoise cable connected to each tower leg.
This type of earthing system shall be used in cultivated (soft) soil where Type A earthing does not provide adequate earthing.

Type C
Installation of earthing rods as described for Type A, but with each rod being extended to a length of 6m and an earthing counterpoise cable connected to each tower leg.
This earthing system shall generally be used where ground conditions are not favourable but not rocky.
Alternatively, 30m of earthing counterpoise shall be laid to the edge of the servitude, then in parallel to the line from both sides of the tower. The cable shall be buried at the specified minimum depths and shall be clamped at two diagonally opposite corners of the tower to the corresponding stub as detailed above. This will be classed as Type A. Two additional 30m long earthing counterpoise cables connected to the first lengths shall be Type B, and another two additional 30m cables will be Type C.
This type of earthing system shall generally be used in rocky grounds.

Type D
Any special measure and method (deep grounding, counterpoise connection to the adjacent tower, earth conductivity improving chemicals etc.), subject to approval of the Engineer, shall be used in specific soils where Type C earthing cannot provide sufficient resistance reduction.

- For all earthing system types, each earthing cable section shall be separately bolted to the tower so that it can be disconnected for the purpose of earth resistance measurements, if required.
- At each tower connected to an earthing system, the Contractor shall measure the electrical footing resistance to earth with the system connected. The measurements shall also be recorded by the Contractor in the tower footing earth resistance profile.
- The terminal towers shall be connected to the substation earthing grid.
- Type and thickness of galvanizing shall provide sufficient protection of steel for 20 years of service and shall not be less than 610 g/mm².
- Metal roofs of existing buildings constructed within 30m of the centre of the transmission line shall be securely earthed. A minimum of two earth connections shall be made to opposite sides of the roofs by means of earthing (counterpoise) cable, which shall be led down the sides of the building to earth. The earthing cable shall be securely fixed in cleats to the sides of the buildings and not less than 2m of the cable shall be buried in the ground at a depth of at least 800 mm.
- All metallic fences, new and existing, which cross under or are located near or parallel to the transmission line shall be earthed as follows:
  - One earthing rod shall be used to ground each 100m of fence that is parallel to and within 50m of the centre line of the transmission line.
  - One earthing rod shall be used on each side of the right of way to earth fences crossing under the line.
  - Earthing rods, to which the fence wires shall be bonded, shall be driven to a depth of not less than 1.5m.

- All metallic fence gates within the right of way shall be electrically bonded to the fences.

8.2.21 Design Calculations

The Contractor shall submit the following design calculations to the Engineer:

a) wire clearance diagram;
b) line diagram;
c) tower design calculations (in an approved format) indicating the applied loading along with calculation, loading tree, body wind load calculation, the design load for each member under the critical loading case, member size, slenderness ratio, allowable load and end connection details;
d) when requested the load for each member for each loading case shall be made available;
e) foundation load schedule;
f) wire clearance diagrams for each terminal and junction position.

The Contractor shall not proceed with any tower prototype test until after the approval of the design calculation. **This is a Hold Point.**

The tower shall be designed using PLS-Tower software. The Contractor is required to submit PLS-Tower backup along with hard copy of the design report.

8.2.22 Fabrication Drawings

8.2.21.1. The Contractor shall submit the following fabrication drawings to the Engineer;

a) Panel assembly (fabrication) drawings;
b) Erection drawings;
c) Stub setting diagrams;
d) Stub, anchor bolt assembly.

8.2.21.2. Panel assembly drawings shall show all material in place, complete with all fabrication and connection details. A complete tabulation listing all pieces for the portion of the support detailed shall be shown on each drawing.

8.2.21.3. Each erection diagram shall show one support panel, together with a key diagram indicating its location on the complete support. Each piece shall be identified by its mark number. The number and length of bolts and number and type of nuts and washers required for proper assembly shall be shown at each connection. A complete tabulation listing all the material needed for the support panel including all bolts, nuts, fill and bevel washers and locknuts, shall be shown on each drawing. The tabulation shall show the quantity, the mark number, the description of the piece (including size and length), the total mass (including the allowance of 3.5% additional mass for galvanising) to the nearest 0.1 kg of all the pieces of the same mark, and the number of the drawing on which the shop detail of the piece can be found. The quantities including 5% excess of step bolts, bolts, nuts, fill and bevel washers, and locknuts shall be shown.

8.2.21.4. The Contractor shall make all changes to the detail (fabrication) and the erection drawings which the Engineer determines necessary to make the finished support fabrication conform to the requirements and intent of this specification. The Contractor shall not proceed with any fabrication until after the submission of the fabrication drawings. **This is a Hold Point.**

8.2.21.5 The Contractor shall submit scanned copy of approved erection/structural drawings of each tower for record purpose after the successful test.

8.2.21.6 The Contractor shall submit hardcopy of shop drawings of each tower extension-wise along with AutoCAD soft copy for record purpose after the successful test.

8.2.21.7 The Contractor shall submit hardcopy of bill of material of each tower extension-wise along with editable soft copy for record purpose after the successful proto test.

8.2.21.8 In case of existing pre-designed towers, if the drawings/documents mentioned above are not available and/or incomplete and/or correct, then the Contractor shall develop and submit such drawings/documents for approval. They will submit hardcopy and soft copy (scanned for approved copy) along with editable soft copy for record purpose after the successful proto test.

8.2.23 Cradle Guards

Not Applicable.

8.3 Materials

8.3.1 Steel

8.3.1.1. All steel shall comply with BS EN 10025 or BS EN 10210 as appropriate and shall be suitable for all the usual fabrication processes, including hot and cold working within the specified ranges.

8.3.1.2. The quality of finished steel shall be in accordance with BS EN 10163. All steel shall be free from blisters, scale, laminations, segregation and other defects. There shall be no rolling laps at toes of angles or rolled-in mill scale.

8.3.1.3. The following grades of steel shall be applicable :

a) Mild steel shall be either grade S235JRG2 or S275JR.
b) High tensile steel shall be grade S355JO

8.3.1.4. Steel section profiles shall be in accordance with the requirements of BS 4: Part 1, BS EN 10210-2, BS EN 10056-1, BS EN 10024, BS EN 10034 and BS EN 10056-2 as appropriate.

8.3.1.5. Hot rolled steel plate, 3 mm thick or more, shall be in accordance with the requirements of BS EN 10029.

8.3.2 Malleable Cast Iron

Malleable cast iron shall be in accordance with the requirements of BS EN 1562 for white heart or pearlite and BS EN 1563 for spheroidal graphite .

8.3.3 Bolts, Nuts, Clevis Pins and Washers

8.3.3.1. Unless specified to the contrary the following grades of steel shall be applicable :

a) Material quality of bolts of 12 mm diameter shall be Grade 4.6 according to ISO 898
b) Material quality of bolts and clevis pins of 16 mm diameter and over shall be Grade 5.6 according to ISO 898.
c) Material quality of non-structural step bolts shall be Grade 8.8 according to ISO 898.
d) Material quality of nuts shall be Grade 5 according to ISO 898 and appropriate to the material quality of bolts.

8.3.3.2. Unless other specified, bolts and nuts shall be ISO Metric Black Hexagon to BS 4190, and shall be threaded ISO metric course pitch to BS 3643: Part 2, tolerance class 7H/8g.

8.3.3.3. Countersunk and other bolts without hexagon heads shall have slotted heads.

8.3.3.4. All flat washers shall comply with the requirements of BS 4320, Form E, Grade 4.6 or 5.6 appropriate to the material quality of bolts. Unless specified to the contrary they shall be 3 mm thick. Pack washers shall have an external diameter of twice the nominal bolt diameter +15 mm, a hole diameter of nominal diameter +2 mm and a thickness as specified on the appropriate fabrication drawing. Single core spring washers shall comply with the requirements of BS 4464, Type B.

8.3.3.5. Split pins shall comply with the requirements of BS 1574 and shall be of austenitic stainless steel capable of complying with the requirements relating to the inter-crystalline corrosion test of BS EN 10083 etc.

8.3.4 Welding

Consumable for use in metal arc welding shall be in accordance with the requirements of BS EN 1011-1 and -2.

8.3.5 Flooring

Open type floor shall be fabricated from either steel complying with BS EN 10025 Grade S275JR or BS EN 515, 573, 755 and 12020. Minimum thickness for load bearing, transverse and pressed bars shall not be less than 3.0 mm.

8.4 Workmanship

8.4.1 General

8.4.1.1 The work shall be carried out in a thoroughly reliable and workmanlike fashion in order to ensure satisfactory assembly and erection, interchangeability of similar members, accuracy of dimensions, position and alignment of holes.

8.4.1.2 Punched holes, shall wherever practicable, be Jig, NC or CNC punched true to form and free from rags, burrs and distortions. Punches and dies shall be strictly monitored to ensure that any

producing, irregular holes or defects previously mentioned shall be immediately replaced. Drilled holes shall be clean, free from burrs and square to the surface of the material.

8.4.1.3 Hole diameters shall be in the black unless specified to the contrary. For bolts up to but not including 30 mm diameter - nominal diameter +1.5 mm. For bolts 30 mm diameter or greater - nominal diameter + 2.0 mm.

8.4.2 Cutting

8.4.2.1 Cutting of materials by either cropping, shearing, guillotining will be permitted up to and including the thickness specified below:

Quality (sub-grade)	JR	- 16 mm
	JO	- 20 mm

8.4.2.2 Materials of either greater thickness or higher quality (sub-grade) must be either machine frame-cut or cold sawn. Hand held flame-cutting is not permitted.

8.4.2.3 Where materials are cropped, sheared or Guillotined, the finished edge shall be free form rags, burrs, notches and distortions. Flame-cutting of grade S355 steel shall be preceded by a slight pre- heat by passing the cutting, flame over the area to be cut and the cutting speed reduced in comparison to those normally used for Grade S275 steels of similar thickness. Every effort shall be made to avoid having the flame-cut edge in tension, especially in grade S355. The flame-cut edges shall be lightly dressed after cutting to remove notches etc.

8.4.3 Drilling and Punching

8.4.3.1 Punching, full sized holes will be permitted up to and including the thickness specified below:

Quality (sub-grade)	JR	- 16 mm
	JO	- 20 mm

8.4.3.2 No hole shall be punched where the thickness of the materials exceeds the finished diameter of the hole. Finished holes shall be true to form and free from rags, burrs and distortion.

8.4.3.3 Materials of either greater thickness or higher quality (sub-grade) must be either drilled to final diameter or punched 2 mm undersize and reamed or core drilled to final diameter. Welding up of misplaced holes is not permitted without the prior approval of the Employer. **This is a Hold Point.**

8.4.3.4 In the case where approval is granted, the new hole must be drilled where it passes through or adjacent to the weld are of the previous hole irrespective of material grade or thickness.

8.4.4 Presswork/Bending

8.4.4.1. All bends in grades S355JO and S355J2G3 steel over 90 in 1000 shall be made hot within the temperature range of 850 to 1000 °C, but normal cold correction will be permitted.

8.4.4.2. Means shall be provided for the random checking of temperatures (Tempilstiks or Pyrometer).

8.4.4.3. Bends in grades S235JRG2 and 275JR steel plates up to 10 mm thick may be made cold up to an including 1175 in 1000.

Bends, open and close flanges in angle sections may be made cold up to and including 600 in 1000.

8.4.4.4. However, in both of the above cases, the Contractor shall take adequate precautions to avoid the risk of subsequent galvanizing embrittlement.

8.4.4.5. Bends shall be of even, profile and free from surface damage due to press tools indentations.

8.4.4.6. The formation of bends by the 'cut and weld' method unless specified on the drawings, is not permitted without prior approval of the Employer**. This is a Hold Point.**

8.4.5 Welding

8.4.5.1 All welding shall be carried out in accordance with BS EN 1011-1 and -2.

8.4.5.2 Pre-heating, where required, shall be checked by the use of Tempilstiks or similar over an area of 150 mm either side of the weld area.

8.4.5.3 Assembly welds (tacks) shall be carried out to the same procedures and welding conditions as the main welds and shall be at least 50 mm long.

8.4.5.4 Stop-start positions shall be kept to a minimum and shall be kept clear by a minimum of 25 mm of all corners and edges of plates (i.e. the weld must be laid down continuously at these points). Where the first run in multi-run welds is larger than subsequent runs, welding should continue until completed, thereby ensuring the weld area is not allowed to cool. After completion the unit should be allowed to cool slowly and should not be subjected to draughts or low temperatures.

8.4.5.5 Where materials are to be galvanized, all welds shall be continuous so as to ensure a pickle-tight connection and shall be thoroughly cleaned (preferably by shot-blasting) to remove all slag, manganese (Carbon Dioxide welding), and weld splatter.

8.4.6 Erection Marks

8.4.6.1. Before leaving the fabricator's works, all members shall be stamped with distinguishing numbers and/or letters corresponding to those on the general arrangement or fabrication drawings. Additionally, the agreed fabricator's identification symbol must appear adjacent to the erection mark.

8.4.6.2. Erection marks shall be stamped on before galvanizing, using characters at least 10 mm high and shall be clearly legible after galvanizing.

8.4.6.3. Erection marks shall be located as follows:

a) All members - stamped within 600 mm of the end but clear of holes;
b) Plates or flat bars - stamped at most suitable position between holes;
c) Main leg and elevation diagonal members - stamped at top end of bar;
d) Horizontal members - stamped at either end of bar;
e) Steel poles 100 mm either side of the joint.

8.4.6.4. Where malleable cast iron fittings are used the erection mark shall be 6 mm high raised characters, where appropriate the following information shall be included :

a) specified minimum failing load;
b) date of manufacture (month and year)
c) cast code.

8.4.6.5. The erection marks shall be: AAAA-BBB-C

8.4.6.6. Where, AAAA - Tower Type, BBB - Mark Number, and C - Steel Grade (H for high tensile steel and M for mild steel)

8.4.6.7. Erection mark coding shall be agreed with the Employer. **This is a Hold Point.**

8.5 Protective Treatment

8.5.1 Galvanizing

8.5.1.1. Unless otherwise specified after completion of all fabrication processes (including all drilling, punching, stamping, cutting bending and welding) support steelwork, poles and pole steelwork, including nuts, bolts and washers shall be hot-dip galvanized and tested in accordance with the requirements of BS EN ISO 1461. Electro-galvanizing is not an acceptable alternative.

8.5.1.2. The minimum average coating thickness shall be as follows:

	Thickness µm	(Mass g/m²)
Steel articles which are not centrifuged, 6 mm thick and over	85	(610)
Steel articles which are not centrifuged, under 6 mm but not less than 3 mm	70	(505)
Grey and malleable iron castings	85	(610)
Threaded works and other articles which are centrifuged	50	(360)

8.5.1.3. Excessively thick or brittle coatings due to high levels of silicon or phosphorus in the steel, which may result in an increased risk of coating damage and/or other features that make the final product non-fit-for-purpose shall be cause for rejection.

8.5.1.4. The ingot zinc used for galvanizing shall comply with the requirements of BS EN 1179.

8.5.1.5. All materials prior to galvanizing shall be free from oil, grease or any substance which may adversely affect the quality of finish.

8.5.1.6. Castings should be as free as possible from surface porosity and shrinkage holes and should be cleaned by grit blasting, electrolytic pickling or by other means specially suitable for castings.

8.5.1.7. The preparation for galvanizing and the galvanizing itself shall not adversely affect the mechanical properties of the coated materials.

8.5.1.8. Unless otherwise specified, all materials shall be treated with Sodium Dichromate in order to prevent wet storage stains (white rust) during storage and transport.

8.5.1.9. All bolts and screwed rods, including the threaded portions, shall be galvanized. The threads shall be cleaned of all surpluses on packing, clear of the ground and away from all materials that might stain or corrode the galvanizing. Black steel packing or bins shall not be spelter by spinning or brushing. Dies shall not be used for cleaning threads other than on nuts. Nuts shall be galvanized and tapped 0.4 mm oversize and threads shall be oiled.

8.5.1.10. Bolts shall be delivered with nuts run up the full extent of the thread. All galvanized materials shall be stored used.

8.6 Tower Erection

8.6.1 General

The Contractor shall provide the Employer with a method statement giving sequential details of the erection method and including his intended program. The method statement shall be submitted to the Employer for acceptance the requisite period before support erection commences. **This is a Hold Point.**

8.6.2 Safety

The erection shall be carried out in accordance with guidance given in the relevant parts of BS 5531 and current health and safety legislation.

8.6.3 Site Storage

All support steelwork stored at site shall be kept clear of the ground where possible. Contact with brackish water, or other substances likely to attack galvanizing shall be avoided and all tower members kept in a clean and tidy condition.

Preventative measures shall be taken to prevent deterioration of galvanized or other protective surfaces during transport, storage and erection. Superficial rust stains shall be removed without causing damage to the protective surfaces.

8.6.4 Damaged Steelwork

Unless otherwise directed, steelwork damaged during off-loading, transportation, storage or erection shall be replaced.

8.6.5 Damaged Galvanizing

The renovation of damaged area of galvanizing shall be carried out using a technical agreed with the Employer. **This is a Hold Point.**

8.6.6 Workmanship

8.6.6.1 The Contractor shall ensure that Towers are not strained or damaged in any way during erection. As far as practical, bolt heads, rather than nuts, shall be on the inner or downward faces of support joints. Bolt locking, after erection shall be in accordance with the requirements of **Annex 8-10**.

8.6.6.2 All holes that align through both components of double angle (back to back) members shall be filled by fitting, a bolt, with suitable pack washers between components. All spare holes (e.g. holes for alternative positions of supplementary fittings) in double angle members shall be included in this requirement.

8.6.6.3 Towers shall be erected vertically within a tolerance of 0.1 percent of the overall height before conductor erection.

8.6.7 Anti-Climbing Devices, Danger and Identification Plates

As soon as practical after completion of support erection, anti-climbing devices, danger and identification plates in accordance with the requirements of the Sub-clause 8.2.13.

All ladders and temporary step bolts below the anti-climbing device shall be removed when erection work is not in progress.

8.6.8 Aircraft Navigation (Obstruction Aids)

8.6.8.1 Where required aircraft navigation obstruction lights complete with all necessary cabling, control equipment, solar panels, storage batteries, access ladders and platforms shall be fitted.

8.6.8.2 All installation shall be in accordance with approved general arrangement drawings and supplier's instructions.

8.6.8.3 Reference shall be made to Section 15- Aircraft Navigation (Obstruction Aids) for details of the specific requirements.

8.7 Quality Control

8.7.1 General

8.7.1.1. Routine tests on raw material and fabricated individual members (components) of lattice steel towers and associated steelwork shall be undertaken in accordance with the requirements of this specification. Prototype (type) tests on lattice steel towers shall be undertaken when required by the Employer in accordance with the requirements of Clause 8.7.7.

8.7.1.2. All steel ex-mills or received from merchants' stocks shall be marked to identify the cast or casts from which it was made in accordance with Section 9 of BS EN 10025 and Section 10 of BS EN 10210, and be covered by a test (mill) certificate stating the mechanical, chemical and where specified the impact properties and carbon equivalent value and clearly showing the cast numbers; to prove compliance with tables 2 and 5 of BS EN 10025 and tables A1 and A3 of BS EN 10210.

8.7.1.3. The optional impact test BS EN 10210 option 1.6 for quality JO steel hollow sections is required.

8.7.1.4. Unless agreed to the contrary the following maximum Carbon Equivalent Values (CEV) for steel supplied in accordance with BS EN 10025 and BS EN 10210 shall not be exceeded (see also BS 5950 Part 2, Clause 4.2):

Grade	S235	0.35
Grade	S275	0.41
Grade	S355	0.45

8.7.1.5. All high tensile steel solid round sections shall be ultrasonic tested for laminations at the rolling mills in accordance with the requirements of BS EN 10160.

8.7.1.6. In the event of test certificates being unobtainable, the Contractor shall arrange, at his own cost, for the independent testing and analysis of materials. Testing shall be in accordance with the requirements of BS EN 10025, Section 8 and BS EN 10210, Section 7.

8.7.1.7. The material grades of all individual pieces shall be capable of positive identification at all stages of fabrication.

8.7.1.8. Steels of different quality shall be stored separately.

8.7.1.9. Bolts and nuts shall be covered by the appropriate test certificate in respect of the tests requirements stated in BS 4190.

8.7.1.10. Copies of all test certificates shall be made available to the Employer.

8.7.1.11. Three nos. locknuts (anti-theft type) as proposed by the Contractor shall be demonstrated up to ultimate capacity at each of the following stages for acceptance: (i) Factory Acceptance Test (ii) Post Landing Inspection and (iii) During Tower Erection. Failure to comply the requirement in any of the above stage will lead to rejection of such material. The Contractor shall bear all the costs of replacement to fulfil the specification of the Contract document.

8.7.1.12. For bolts, nuts and washers of predesigned tower, dimensional tolerances shall be as per the standard mentioned in clause 8.3.3 instead of the reference standard mentioned in the drawings of the existing predesigned towers. The contractor has to submit the relevant drawing of nuts, bolts, ACD, step bolts complying the standard mentioned in clause no. 8.3.3 for approval.

8.7.2 Welding

8.7.2.1. Unless specified to the contrary all structural welded joints shall be undertaken using approved welding procedures in accordance with BS EN 288.

8.7.2.2. Copies of the welding procedures shall be made available to the Employer upon request. However, for all welding associated with the fabrication of high tensile steel solid round sections, or where the combined thickness of the material is in excess of 60 mm, the welding procedures shall be submitted to the Employer for approval, together with the related quality control documentation such as electrode storage, drying and handling requirements. **This is a Hold Point.**

8.7.2.3. All welders shall be tested to meet the requirements of BS EN 287 Part 1 using the appropriate test corresponding to the weld positions and parent materials to be used. Copies of the test certificates shall be made available to the Employer upon request.

8.7.2.4. The Employer reserves the right to have any welding operator retested at any time at no extra cost.

8.7.2.5. Unless specified to the contrary all welding shall be subjected to a non-destructive testing (NDT) programme. Where necessary, this may involve the appointment by the supplier of an independent NDT organization approved by the Employer who will undertake the NDT programme. **This is a Hold Point.**

8.7.2.6. The NDT organization shall have operators suitably qualified to Level 2 of PCN / WSB / MT / 001 / 87. The NDT organization shall submit their proposed procedures for approval. **This is a Hold Point.**

8.7.2.7. The Contractor shall then ensure that the approved procedures are rigidly adhered to.

8.7.2.8. The Contractor shall arrange for the appropriate level of weld/inspection to be undertaken, which shall not be less than the following minimum requirements. For details of the required level of inspection reference should be made to **Annex 8-11**.

Level 1: 100 percent visual inspections in accordance with the requirements of BS EN 970

Level 2: 10 percent of the overall output shall be magnetic particle tested to the acceptance criteria stated in BS EN 1011-1 and 2 for butt and fillet welds respectively.

Level 3: 10 percent of each welder's output shall be magnetic particle tested to the acceptance criteria stated in BS EN 1011-1 and -2 for butt and fillet welds respectively.

Level 4: 20 percent of each welder's output shall be magnetic particle tested to the acceptance criteria stated in BS EN 1011-1 and -2 for fillet welds.

Level 5: 10 percent of each welder's output shall be ultrasonic tested, with a further 10 percent of each welder's output magnetic particle tested - both to the acceptance criteria in BS EN 1011-1 and 2 for butt welds.

Notes:

A All welds, especially butt welds must be continuous to ensure a pickle-tight connection when galvanized.

B Ultrasonic testing to be in accordance with BS EN 1714.

C Magnetic particle testing to be in accordance with BS EN ISO 9934.

8.7.2.9. All weld inspection/testing, shall be undertaken a minimum of 48 hours after the completion of the respective weld**. This is a Notification Point.**

8.7.2.10. Copies of the NDT inspection reports for weld inspection levels 5 and 4 shall be made available to the Employer.

8.7.2.11. Copies for the NDT inspection reports for weld inspection level 3 and 2 shall be made available to the Employer upon request.

8.7.3 Castings

All malleable cast iron castings shall be thoroughly inspected after sand blasting, and any casting with castings defects e.g. sand inclusions and metal penetrations, cracking, raised core, porosity shall be scrapped.

8.7.4 Check Erection

8.7.4.1. Prototype structures (and, where required by the Employer repeat structures) shall be check erected in order to verify the accuracy of detailing and fabrications, including forming, location and size of bolt holes, clipping and shearing.

8.7.4.2. The degree of check erection shall be sufficient to verify not only the main structure, but all ancillary steelwork such as platforms, walkways, ladders etc.

8.7.4.3. In the case of lattice towers, the minimum check erection required shall be one face lying horizontally and the adjacent face erected in the vertical plane, complete with hip and plan bracings. Crossarms and earthwire peaks shall be completely assembled.

8.7.4.4. Sufficient blocking and support shall be provided to prevent distortion and overstressing of the members to ensure proper fit. Assembly shall be accomplished without extraordinary effort to align bolt holes or to force pieces into position. Bolt holes shall not be reamed or enlarged.

8.7.4.5. All modifications found necessary at the time of check erection shall be accurately recorded and the Contractor's drawings, NC tapes etc., shall be amended. Where necessary, modified G.A. drawings shall be forwarded to the Employer.

8.7.4.6. Unless otherwise specified the check erection may be undertaken in either the black or galvanized condition. Where materials are check erected galvanized, all modified items, those subjected to damage or prolonged contact with black steel, shall be re-galvanized at the supplier's cost.

8.7.4.7. The Contractor shall give the Employer the requisite period of notice prior to a check erection being ready for inspection**. This is a Hold Point.**

8.7.5 Galvanizing

Tests for galvanized members and components shall be carried out at the works to ensure compliance with the requirements of BS EN ISO 1461. Details of the test results shall be made available to the Employer upon request.

Certificates relating to the ingot zinc used for galvanizing shall also be made available to the Employer upon request. When requested the fabricator shall, at his own cost, provide a pot melt analysis.

8.7.6 Tolerances

The fabrication tolerances after galvanizing, which are not to be considered cumulative, shall be as follows:

a.	On linear dimensions of nominal sections as per BS 4, BS EN 10210-2, BS EN 10024, BS EN 10029, BS EN 10034 & BS EN 10056-2	
b.	On overall length of member	±1 mm
c.	On centres of holes	±1 mm
d.	On centres of groups of holes	±2 mm
e.	On back-gauges	±1 mm
f.	On corresponding holes in opposite faces of angle or channel sections	±1 mm
g.	On specified hole diameter on the punch side + 0.3 mm (in the black) or where drilled	- 0 mm
h.	Taper on punched holes as measured between the specified hole diameter on the punch side and the hole diameter on the die's side (in the black-) shall not exceed	+1.00mm
i.	On specified bends, open and close flange	± 20/1,000
j.	On the specified included angle (in plan) between welded leg connections or bracing connection plates	± 20/1,000

The permitted tolerance from straightness after galvanising shall not exceed an offset of 1: 1,000, except for hollow sections which shall not exceed 1:600 measured at the worst point. For members greater than 3 m in length, the offset shall be measured over any 3 m length in the member.

8.7.7 Tests-Lattice Steel Tower

(a) Prototype Load Test

8.7.7.1. Load tests on lattice steel towers shall be undertaken in accordance with the requirements of IEC 60652 except the last sentence of Sub-clause 14.1 regarding premature failure of Design tests. If a failure occurs in the final load case, the tower shall be re-tested.

8.7.7.2. Each member of the test tower shall have its yield point identified either from certified mill test reports traceable to the actual steel supplied or from test coupons. Yield point values shall be recorded in the test reports.

8.7.7.3. The type and extension of the structures to be tested shall be in accordance with those specified in **Annex 8-12.** In the event of the testing, facilities not be capable of special testing the structures specified, the testing facilities may be assessed by the Employer and the extension reduced; or the Employer has the right to specify a different test facility for testing maximum height structures at no extra cost to Employer.

8.7.7.4. The structure shall be assembled on rigid foundations. If the Contractor, in carrying out erection of structures on site, proposed to assemble the structures on the ground and subsequently raise them to the vertical position, the test structures shall be so erected in the presence of the Employer. The Contractor shall give the Employer the requisite period of notice prior to the erection of the structure. **This is a Notification Point.** Structures submitted for test, together with bolts and fittings shall be galvanized.

8.7.7.5. The test load cases required to prove compliance of the structure design and order of tests shall be agreed between the Employer and the Contractor. There shall be no restrictions on the number of test load cases to be applied to the structure which may include a test to destruction.

8.7.7.6. Loads shall be applied in a manner approved by the Employer and maintained for one minute for below 100% load and three minutes at 100% and above loads without variation. The test programme together with details of the test rigging and load attachment details shall be submitted to the Employer, **This is a Hold Point.**

8.7.7.7. Should it become necessary to adjust the loading, the one minute period shall recommence after the loading is stabilized and constant. All test loads shall be removed completely before the loads for the next tests are applied, unless previously agreed by the Employer. All test loads corresponding to phase conductor and earthwire loading shall be applied directly to the regular attachment details provided for these loads.

8.7.7.8. Any conspicuous yielding or any failure under any test loading or the use of any incorrect grade of steel shall be considered a defect. If a failure occurs, the Contractor shall correct the defect and repeat the test loading at his own expense.

8.7.7.9. Coupons or test samples shall be cut from members which fail in the destruction tests and from those members judged to be critical from the design calculations, and standard tensile tests shall be performed at the Contractor's expense. The results of these tests together with test report and certificate shall be made available to the Employer.

8.7.7.10. Any structure or part thereof which has been subjected to type testing shall not be used subsequently in the construction of the line and not required to supply such structure or part to Employer. The text “T” shall be added in the mark number of angles and plates of the proto type tested tower. All costs related to these towers shall deem to be included in the type test cost of towers in the Price Schedule.

8.7.7.11. The Contractor shall furnish all test structures, testing facilities, rigging, load cells as may be required and shall perform all work herein specified or implied. All items not specifically mentioned shall be deemed inclusive to testing.

8.7.7.12. The Contractor shall give the Employer the requisite period of notice prior to undertaking the tests.

(b) Proto Assembly

8.7.7.13. Proto assembly tower tests shall be conducted before batch manufacturing of the towers. The type and extension of the structures to be proto assembly tested shall be in accordance with those specified in **Annex 8-12**.

8.7.7.14. After successful proto assembly testing, subject to type test (wherever applicable) the respective towers shall be manufactured as per required quantity for supply and installation. Before shipment of such manufactured towers, randomly selected samples shall be tested for each lot as per relevant IEC/British Standard. Dimension check, galvanization thickness test, tensile tests, elongation measurement, impact test and any other test as per Standard shall be performed in this regard at the Contractor's expense. The results of these tests together with test report and certificate shall be made available to the Engineer.

8.7.7.15. The Contractor shall furnish all test structures, testing facilities and shall perform all work herein specified or implied. All items not specifically mentioned shall be deemed inclusive to testing.

8.7.7.16. The Contractor shall give the Engineer the requisite period of notice prior to undertaking the tests.

8.7.8 Certificate of Conformity

The certificate of conformity shall be supported by the following documentation:

a) material test (mill) certificates;
b) bolt and nut certificates;
c) NDT welding inspection (levels 5 & 4);
d) test reports of any prototype or sample tests undertaken;
e) the results of any ultrasonic testing of solid round sections;
f) the results of any welding NDT inspections (levels 3 & 2);
g) Welder's test certificates;
h) galvanizing thickness records;
i) the ingot zinc certificates;
j) galvanizing pot melt analysis;

8.7.9 Quality Control after Erection

8.7.9.1 The Contractor shall be responsible for checking that the Towers are complete and that all bolts have been correctly tightened before conductor commences. A record of this work shall be kept by the Contractor and made available to the Employer on request.

8.7.9.2 Critical bolts are to be marked after erection with red paint to ensure priority checking during maintenance.

8.7.9.3 Where appropriate, test on the aircraft obstruction lighting shall be undertaken to prove compliance of the system. Records of the tests shall be made available to the Employer upon request.

Annex 8-1: Design Parameters and Conductor System Loading

Tower Design Requirement-– Not applicable

1.

Sl.	Tower Type	Scope of this Contract include Design	Pre-designed Towers will be used
(i)	400kV Overland	-	-
(ii)	400kV River Crossing	-	-
(iii)	230kV Double Circuit Overland	-	-
(iv)	230kV Double Circuit River Crossing	-	-
(v)	230kV Four Circuit	Yes (Tower Type 2QT6H for Twin ACSR Mallard)	-
(vi)	132kV Four Circuit	-	-
(vii)	132kV Double Circuit	-	-
(viii)	132kV Four Circuit	-	-

2. Design Parameters

2.1 400kV Towers -– Not applicable

	400kV Overland	400kV River Crossing-NA
3s gust wind speed (Failure Limit)	80 m/s	66.5 m/s
Wind load factor	1.15	1.15
Exposure category	C	C

2.2 230kV Towers

	230 kV Overland Towers	230 kV River Crossing Towers-NA
3s gust wind speed (Failure Limit)	56.7 m/s(LILO of Cumilla(N) – Shahjibazar PP) 62.5m/s (LILO of Sripur – Ashuganj)	66.5 m/s
Wind load factor	1.15	1.15
Exposure category	C	C

2.3 132kV Towers

	132kV Towers	
3s gust wind speed (Failure Limit)	62.5 m/s	
Wind load factor	1.15	

Exposure category	C	

3. Conductor System Loading

3.1(1) 400kV Overland Portion (Quad ACSR Finch) – Not applicable

Loading Condition	Maximum Allowable Tension[1]
Normal condition (Failure Limit)	42.2% of Ultimate tensile strength (Top Conductor)
	41.4% of Ultimate tensile strength (Middle Conductor)
	40.5% of Ultimate tensile strength (Bottom Conductor)
	54.7% of Ultimate tensile strength (Earthwire & OPGW)
Normal condition (Damage Limit)	50% of Ultimate tensile strength
Everyday condition	20% of Ultimate tensile strength
[1]The bidder/Contractor shall determine the appropriate conductor tension under different loading condition to maintain the minimum height of phase conductors after creep or after load at the support on standard height, from ground level for the corresponding span criteria. Min. height of bottom conductor attachment level is mentioned in Annex under this Section.	

3.1(2) 400kV Overland Portion (Quad ACSR Finch) – Not applicable

Loading Condition	Maximum Allowable Tension[1]
Normal condition (Failure Limit)	82.1196 kN (Top Conductor)
	80.5688 kN (Middle Conductor)
	78.7195 kN (Bottom Conductor)
	50.7788 kN (Earthwire & OPGW)
Normal condition (Damage Limit)	78.7195 kN
Everyday condition	26.0945 kN
[1]The bidder/Contractor shall determine the appropriate conductor tension under different loading condition to maintain the minimum height of phase conductors after creep or after load at the support on standard height, from ground level for the corresponding span criteria. Min. height of bottom conductor attachment level is mentioned in Annex under this Section.	

3.2 400kV River Crossing Portion (Quad ACCC Dhaka per phase) – Not applicable

Loading Condition	Maximum Allowable Tension[1]
Normal condition (Failure Limit)	80% of Ultimate tensile strength
	80% of Ultimate tensile strength (Earthwire & OPGW)
Normal condition (Damage Limit)	55% of Ultimate tensile strength
Everyday condition	20% of Ultimate tensile strength
[1]The bidder/Contractor shall determine the appropriate conductor tension under different loading condition to maintain the minimum height of phase conductors after creep or after load at the support on standard height, from ground level for the corresponding span criteria. Min. height of bottom	

conductor attachment level is mentioned in Annex under this Section.

3.3 400kV Overland Portion (Twin ACCC Dhaka per phase/Twin ACSR Finch per phase) – Not applicable

Loading Condition	Maximum Allowable Tension[1]
Normal condition (Failure Limit)	50% of Ultimate tensile strength
	50% of Ultimate tensile strength (Earthwire & OPGW)
Normal condition (Damage Limit)	50% of Ultimate tensile strength
Everyday condition	20% of Ultimate tensile strength
[1]The bidder/Contractor shall determine the appropriate conductor tension under different loading condition to maintain the minimum height of phase conductors after creep or after load at the support on standard height, from ground level for the corresponding span criteria. Min. height of bottom conductor attachment level is mentioned in Annex under this Section.	

3.4 400kV River Crossing Portion (Twin ACCC Dhaka per phase/Twin ACSR Finch per phase) – Not applicable

Loading Condition	Maximum Allowable Tension[1]
Normal condition (Failure Limit)	50% of Ultimate tensile strength
	50% of Ultimate tensile strength (Earthwire & OPGW)
Normal condition (Damage Limit)	50% of Ultimate tensile strength
Everyday condition	20% of Ultimate tensile strength
[1]The bidder/Contractor shall determine the appropriate conductor tension under different loading condition to maintain the minimum height of phase conductors after creep or after load at the support on standard height, from ground level for the corresponding span criteria. Min. height of bottom conductor attachment level is mentioned in Annex under this Section.	

3.5 230kV Overland Portion

Loading Condition	Maximum Allowable Tension[1,2]
Normal condition (Failure Limit)	50% of Ultimate tensile strength (Phase conductor)
	50% of Ultimate tensile strength (Earthwire & OPGW)
Normal condition (Damage Limit)	50% of Ultimate tensile strength
Everyday condition	20% of Ultimate tensile strength
[1]The bidder/Contractor shall determine the appropriate conductor tension under different loading condition to maintain the minimum height of phase conductors after creep or after load at the support on standard height, from ground level for the corresponding span criteria. Min. height of bottom conductor attachment level is mentioned in Annex under this Section.	

3.6 132kV Overland Portion

Loading Condition	Maximum Allowable Tension[1]
Normal condition (Failure Limit)	50% of Ultimate tensile strength(Phase conductor)
	50% of Ultimate tensile strength (Earthwire & OPGW)
Normal condition (Damage Limit)	50% of Ultimate tensile strength
Everyday condition	20% of Ultimate tensile strength
[1]The bidder/Contractor shall determine the appropriate conductor tension under different loading condition to maintain the minimum height of phase conductors after creep or after load at the support on standard height, from ground level for the corresponding span criteria. Min. height of bottom conductor attachment level is mentioned in Annex under this Section.	

3.7 132kV Overland and River Crossing Portion– Not applicable

Loading Condition	Maximum Allowable Tension[1]
Normal condition (Failure Limit)	50% of Ultimate tensile strength
	50% of Ultimate tensile strength (Earthwire & OPGW)
Normal condition (Damage Limit)	50% of Ultimate tensile strength
Everyday condition	20% of Ultimate tensile strength
[1]The bidder/Contractor shall determine the appropriate conductor tension under different loading condition to maintain the minimum height of phase conductors after creep or after load at the support on standard height, from ground level for the corresponding span criteria. Min. height of bottom conductor attachment level is mentioned in Annex under this Section.	

Annex 8-2: Classes of Towers

The steel towers requires in this project is as follows:

1. **230kV double circuit** three phase vertical formation lattice steel towers with twin ACSR Mallard conductor per phase and two earthwires (one of the earthwires shall be OPGW)
2. **230kV four circuit** three phase vertical formation lattice steel towers with twin ACSR Mallard conductor per phase and two earthwires (both of the earthwires shall be OPGW).
3. **132kV double circuit** three phase vertical formation lattice steel towers with single ACSR Grosbeak conductor per phase and one earthwire (one earthwire shall be OPGW)
4. **132kV four circuit** three phase vertical formation lattice steel towers with single ACSR Grosbeak conductor per phase and two earthwire (both earthwire shall be OPGW)

Annex 8-3: Designation & Uses of Towers

Designation	Angle of Deviation / Entry	Description	Type of Insulator Set
400 kV Double Circuit Tower for Quad ACSR Finch Conductor/Quad ACSR Chuker Conductor/Quad ACCC Dhaka Conductor– Not applicable			
4DL	0° - 1°	Intermediate	Suspension
4D1	0° - 3°	Angle	Heavy Suspension
4D25(4DXP)	0° - 25°	Angle(Transposition)	Tension
4D45	25° - 45°	Angle/Reinforcement	Tension
4DT6	45° - 60°	Angle	Tension
	0° - 30° (Angle of Entry)	Terminal	Tension
4DR1– **Not applicable**	0°		Suspension
4DAX– **Not applicable**	0° - 30°		Tension
400 kV Double Circuit Tower for Twin ACSR Finch equal dia. twin ACCC– Not applicable			
4DL	0° - 1°	Intermediate	Suspension
4D1	0° - 3°	Angle	Heavy Suspension
4D25(4DXP)	0° - 25°	Angle(Transposition)	Tension
4D45	25° - 45°	Angle/Reinforcement	Tension
4DT6	45° - 60°	Angle	Tension
	0° - 30° (Angle of Entry)	Terminal	Tension
4DR	0°		Suspension
4DAX	0° - 30°		Tension
230kV Double Circuit Tower for twin 37/4.176 AAAC conductor/ ACSR Mallard/ ACSR Mallard equiv. ACCC Conductor			
2DL **– Not applicable**	0°-1°	Intermediate	Suspension
2D1 **– Not applicable**	0° - 3°	Angle	Heavy Suspension
2D25 **– Not applicable**	0° – 25°	Angle/Section	Tension
2DT6	25° – 60°	Angle	Tension
	0° – 30° (Angle of Entry)	Terminal	Tension
2D9	60° – 90°	Angle	Tension

Designation	Angle of Deviation / Entry	Description	Type of Insulator Set
– Not applicable			
230kV four circuit tower for twin 37/4.176 AAAC conductor/ACSR Mallard/ACSR Mallard equiv. ACCC Conductor			
2QL	0°-1°	Intermediate	Suspension
2Q1	0° - 3°	Angle	Heavy Suspension
2Q15	0°-15°	Angle	Tension
2Q30	0° - 30°	Angle/Section	Tension
2QT6	30° - 60°	Angle	Tension
	0° - 30° (Angle of Entry)	Terminal	Tension
2QT6H– Not applicable	0° - 60°	Angle	Tension
	0° - 30° (Angle of Entry)	Terminal	Tension
132kV double circuit tower for single ACSR Grosbeak or equal dia. ACCC			
1DL	0°	Intermediate	Suspension
1D1	0° - 10°	Angle	Heavy Suspension
1D25	0° – 25°	Angle/Section	Tension
1DT6	25° – 60° 0° – 30°	Angle Terminal	Tension Tension
1D9– Not applicable	60° – 90°	Angle	Tension
132kV four circuit tower for single ACSR Grosbeak or equal dia. ACCC			
1QL	0°	Intermediate	Suspension
1Q15	0° - 15°	Angle	Heavy Suspension
1Q30	0° – 30°	Angle/Section	Tension
1QT6	30° – 60°	Angle	Tension
	0° – 30° (Angle of Entry)	Terminal	Tension
132kV double circuit tower for single ACSR Finch– Not applicable			
1DLF	0°-1°	Intermediate	Suspension
1D1F	0° - 5°	Angle	Heavy Suspension
1D25F	0° – 25°	Angle/Section	Tension
1DT6F	25° – 60°	Angle	Tension
	0° – 30° (Angle of Entry)	Terminal	Tension

Annex 8-4: Support Outline

Annex 8-4(1) Support Extensions

Tower Type	Type of Extension	Range (m)
400kV double circuit towers for Quad ACCC Dhaka/Quad ACSR Finch– Not applicable		
4DL	Body/leg extension	Std., 1.5, 3.0, 4.5, 6.0, 9.0
4D1	Body/leg extension	Std., 1.5, 3.0, 4.5, 6.0, 9.0, 12.0, 15.0, 20.0, 25.0, 30.0, 40.0
4D25(4DXP)	Body/leg extension	Std., 1.5, 3.0, 4.5, 6.0, 9.0
4D45	Body/leg extension	Std., 1.5, 3.0, 4.5, 6.0, 9.0
4DT6	Body/leg extension	Std., 1.5, 3.0, 4.5, 6.0, 9.0
4DR1– Not applicable	Body/leg extension	Std., 10.0, 20.0, 30.0
4DR2– Not applicable	Body/leg extension	Std.
4DAX– Not applicable	Body/leg extension	Std.
400 kV Double Circuit Tower for Twin ACSR Finch equal dia. twin ACCC– Not applicable		
4DL	Body/leg extension	Std., 1.5, 3.0, 4.5, 6.0, 9.0
4D1	Body/leg extension	Std., 1.5, 3.0, 4.5, 6.0, 9.0, 12.0, 15.0, 20.0, 25.0, 30.0, 40.0
4D25(4DXP)	Body/leg extension	Std., 1.5, 3.0, 4.5, 6.0, 9.0
4D45	Body/leg extension	Std., 1.5, 3.0, 4.5, 6.0, 9.0
4DT6	Body/leg extension	Std., 1.5, 3.0, 4.5, 6.0, 9.0
4DR1	Body/leg extension	Std., 10.0, 20.0, 30.0
4DR2	Body/leg extension	Std.
4DAX	Body/leg extension	Std.
230kV double circuit towers for Twin Mallard/ Twin Mallard equal dia. twin ACCC		
2DL – Not applicable	Body/leg extension	Std., 1.5, 3.0, 4.5, 6.0, 9.0, 12.0
2D1– Not applicable	Body/leg extension	Std., 1.5, 3.0, 4.5, 6.0, 9.0, 12.0, 15.0, 18.0, 21.0, 25.0
2D25 – Not applicable	Body/leg extension	Std., 1.5, 3.0, 4.5, 6.0, 9.0, 12.0, 15.0
2DT6	Body/leg extension	Std., 1.5, 3.0, 4.5, 6.0, 9.0
2D9– Not applicable	Body/leg extension	Std., 1.5, 3.0, 4.5, 6.0, 9.0, 12.0, 15.0
230kV four circuit towers for Twin Mallard/ Twin Mallard equal dia. twin ACCC		
2QL	Body/leg extension	Std., 1.5, 3.0, 4.5, 6.0, 9.0
2Q1	Body/leg extension	Std., 1.5, 3.0, 6.0, 9.0, 12.0, 15.0, 18.0, 21.0, 25.0
2Q15	Body/leg extension	Std., 1.5, 3.0, 6.0, 9.0
2Q30	Body/leg extension	Std., 1.5, 3.0, 4.5, 6.0, 9.0

2QT6	Body/leg extension	Std., 1.5, 3.0, 4.5, 6.0 & 9.0
2QT6H– Not applicable	Body/leg extension	Std., 12.0, 15.0,18.0, 21.0
132kVdouble circuit towers for Single Grosbeak		
1DL	Body/leg extension	Std., 1.5, 3.0, 4.5, 6.0, 9.0
1D1	Body/leg extension	Std., 1.5, 3.0, 4.5, 6.0, 9.0, 12.0, 15.0
1D25	Body/leg extension	Std., 1.5, 3.0, 9.0
1DT6	Body/leg extension	Std., 1.5, 3.0, 4.5, 6.0, 9.0
132kVfour circuit towers for Single Grosbeak		
1QL	Body/leg extension	Std., 1.5, 3.0, 4.5, 6.0, 9.0
1Q15	Body/leg extension	Std., 1.5, 3.0, 4.5, 6.0, 9.0, 12.0, 15.0
1Q30	Body/leg extension	Std., 3.0, 4.5, 6.0, 9.0
1QT6	Body/leg extension	Std., 1.5, 3.0, 4.5, 6.0 & 9.0
132kV double circuit towers for Single Finch– Not applicable		
1DLF	Body/leg extension	Std., 1.5, 3.0, 4.5, 6.0, 9.0
1D1F	Body/leg extension	Std., 1.5, 3.0, 4.5, 6.0, 9.0, 12.0, 15.0, 18.0
1D25F	Body/leg extension	Std., 3.0, 4.5, 6.0, 9.0
1DT6F	Body/leg extension	Std., 1.5, 3.0, 4.5, 6.0 & 9.0

Note:

(i) Std. means Standard height.

(ii) D25 towers shall be designed to accommodate crossarms and clearance for transposing the line.

(iii) DT6 towers shall be designed to accommodate the loads of slack span coming through auxiliary crossarm.

Annex 8-4(2) Basic Dimension of Supports

(a)400kV Towers – Not applicable

Tower Type	Max. base width of standard height tower at k-point (m)	Max. width of Bottom Cross-arm waist (m)	Min. height of standard height tower bottom conductor attachment point after creep or after load condition from k-point (m)
	x	y	z
4DL	8.860	3.0	24.57
4D1	8.860	3.0	24.57
4D25(4DXP)	9.135	3.5	24.50
4D45	10.37	4.0	24.50
4DT60	11.35	4.0	24.50
4DR1	15.00	4.0	53.25
4DR2	30.10	4.0	133.25

4DAX	15.0	4.0	43.00

Note:

(i) In case the height of tower require to be increased as per detailed calculation on the basis of specification criteria then the width "x" to be considered as max. atcalculated "z" height.

(ii) Minimum height has been provided above. Height of towers to be calculated and checked by the bidders/Contractors on the basis of criteria included in the specification. In case, the height require to be increased as per the detailed calculation, the bidder/Contractor has to increase the same. Price due to suchincreased height shall deem to be included in the Contract Price.

(b)230kV Towers– Not applicable…

Tower Type	Max. base width of standard height tower at k-point (m)	Max. width of Bottom Cross-arm waist (m)	Min. height of standard height tower bottom conductor attachment point after creep or after load condition from k-point (m)
	x	y	z
2QT6H	10	5	19.55

Note:

(ii) In case the height of tower require to be increased as per detailed calculation on the basis of specification criteria then the width "x" to be considered as max. atcalculated "z" height.

(ii) Minimum height has been provided above. Height of towers to be calculated and checked by the bidders/Contractors on the basis of criteria included in the specification. In case, the height require to be increased as per the detailed calculation, the bidder/Contractor has to increase the same. Price due to suchincreased height shall deem to be included in the Contract Price.

(c)132kV Towers– Not applicable

Tower Type	Max. base width of standard height tower at k-point (m)	Max. width of Bottom Cross-arm waist (m)	Min. height of standard height tower bottom conductor attachment point after creep or after load condition from k-point (m)
	x	y	z
1DLF	3.0	1.0	24.57
1D1F	3.5	1.0	24.57
1D25F	5.0	1.5	24.50
1DT6F	6.0	1.5	24.50

Note:

(i) In case the height of tower require to be increased as per detailed calculation on the basis of specification criteria then the width "x" to be considered as max. atcalculated "z" height.

(ii) Minimum height has been provided above. Height of towers to be calculated and checked by the bidders/Contractors on the basis of criteria included in the specification. In case, the height require to be increased as per the detailed calculation, the bidder/Contractor has to increase the same. Price due to suchincreased height shall deem to be included in the Contract Price.

Annex 8-5: Span Criteria

Annex 8-5(1) Overland Portion

1.0 Climatic Loadings and Security Loadings (Intact Conditions)							
1.1 Suspension, Heavy Suspension & Tension Supports							
				132kV	**230kV**		**400kV– Not applicable**
Basic Span (m)				300	375		375
(a)	Wind span	Suspension Towers	(m)	330	375		410
		Heavy Suspension Towers	(m)	525	600		600
		Tension Towers	(m)	330	375		410
(b)	Maximum weight span	Suspension Towers	(m)	525	510		650
		Heavy Suspension Towers	(m)	525	1050		1200
		Tension Towers	(m)	525	510		650
(c)	Minimum weight span	Suspension Towers	(m)	140	180		250
		Heavy Suspension Towers	(m)	140	450		200
		Tension Towers	(m)	0	0		0
1.2 Terminal Supports							
(a)	Wind span	Terminal Tower	(m)	250	315		300
(b)	Maximum weight span	Terminal Tower	(m)	395	430		400
(c)	Minimum weight span	Terminal Tower	(m)	0	0		0
2.0 Security Loadings (Broken Wire Conditions)							
2.1 Suspension & Tension Supports							
(a)	Wind span	Suspension Towers	(m)	250	275		240
		Heavy Suspension Towers	(m)	250	450		360
		Tension Towers	(m)	250	275		240
(b)	Maximum weight span	Suspension Towers	(m)	395	385		360
		Heavy Suspension Towers	(m)	395	385		720
		Tension Towers	(m)	395	385		340
(c)	Minimum weight span	Suspension Towers	(m)	100	130		90
		Heavy Suspension Towers	(m)	100	130		120
		Tension Towers	(m)	0	0		0

Annex 8-5(2) River Crossing Portion (Anchor to Anchor) – Not applicable

1.0 Climatic Loadings and Security Loadings (Intact Conditions)					
1.1 Suspension Supports					
				230kV– Not applicable	**400kV– Not applicable**
(a)	Wind span	Suspension Towers	(m)	-	800
(b)	Maximum weight span	Suspension Towers	(m)	-	1650
(c)	Minimum weight span	Suspension Towers	(m)	-	450
1.2 Anchor Supports					
(a)	Wind span	Anchor Towers	(m)	-	370
(b)	Maximum weight span	Anchor Towers	(m)	-	-850
(c)	Minimum weight span	Anchor Towers	(m)	-	250
2.0 Security Loadings (Broken Wire Conditions)					
2.1 Suspension Supports					
(a)	Wind span	Suspension Towers	(m)	-	480
(b)	Maximum weight span	Suspension Towers	(m)	-	990
(c)	Minimum weight span	Suspension Towers	(m)	-	270

Annex 8-6: System Loading for Non-Pointed Crossarm Connections and Slack Spans Loads

(i) Assumed System Loading Criteria

For non-pointed crossarm loads to be distributed as follows: (for all types of Supports)

	Transverse	Longitudinal	Vertical
Angle/tension towers			
Normal	50% - 50%	100% - 0%	50% - 50%
Security			
– intact	50% - 50%		50%-50%
– broken	75% - 25%	100% - 0%	75% - 25%
Terminal/Anchor towers			
All classes	100% - 0%	100% - 0%	100% - 0%

Wind directions are as shown in the sketch:

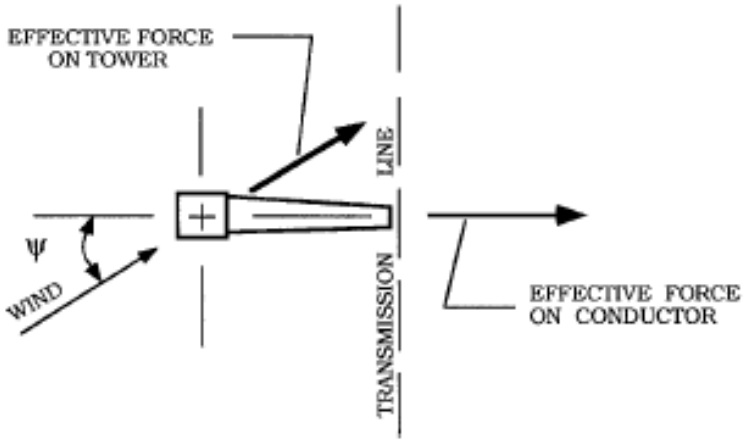

Illustration of yawed wind on a transmission line.

(ii) Slack Span and Downlead Tensions

		132kV	230kV	400kV– **Not applicable**
(a)	Maximum phase conductor slack span and downlead tension (per sub-conductor)	7.0 kN	10.0 kN	10.0 kN
(b)	Maximum earthwire slack span and downlead tension	4.5 kN	4.5 kN	4.5 kN
(c)	Maximum slack span	100m	100m	100m

Annex 8-7: Minimum Thickness & Diameter of Material– Not applicable

The minimum thickness and diameter of material used in members and bolts shall be as detailed below:

(a)	For leg members and compression chords in gantries and crossarms.	(mm)	6
(b)	For other members (including earthwire peaks) carrying calculated stress.	(mm)	5
(c)	For secondary members without calculated stress.	(mm)	4
(d)	Gusset plates for lattice towers.	(mm)	6
(e)	Bolt diameter for members carrying calculated stress.	(mm)	16, 24 & 30
(f)	Minimum bolt diameter for secondary members without calculated stress	(mm)	16

Annex 8-8: Material Strength Factor– Not applicable

Sl.	Tower Test Provision	Material Strength Factor
(a)	Proto Load tested tower	1.0
(b)	Without proto Load test tower	0.9
(c)	Extension part of the tower that are not tested during Proto Load Test	0.9

Annex 8-9: Electrical Clearances - Live Metal & Earthed Steelwork, Spatial Distances and Downlead Clearances

Annex 8-9(1) Electrical Clearances - Live Metal & Earthed Steelwork

Please also refer to the Bid Drawings, Section 22, Volume 2 of 3 of the bidding documents.

	Description	Unit	230kV	132kV
(a)	Minimum clearance between live metal and earthed steel work for suspension sets, and/or conductor, and/or weighted jumper loops and/or pilot suspension sets deflected between 0deg and 10deg from the vertical with the conductor leaving the suspension clamp at any angle between 0° and+10° (downwards) and/or for tension insulators inclined between -5° and +10°. **(Swing under nil wind)**	(mm)	2300	1450
(b)	Minimum clearance between live metal and earthed steelwork for suspension sets, and/or conductor, and/or weighted jumper loops and/or pilot suspension sets deflected between 10deg and 45deg (10deg and 15deg for weighted jumper loops & pilot suspension sets) from the vertical, with the conductor leaving the suspension clamp at any angle between 0° and +10° and/or tension insulators inclined between -5° and +10°. **(Lightning Impulse Clearance)**	(mm)	1630	900
(c)	Minimum clearance between live metal and earthed steelwork for unweighted jumper loops deflected between 10° and 25° from the vertical. **(Lightning impulse clearance)**	(mm)	1630	900
(d)	Minimum clearance between live metal and earthed steelwork for suspension sets, and/or conductor, and/or weighted jumper loops and/or pilot suspension sets deflected between 45^0 and 70^0 from the vertical, with the conductor leaving the suspension clamp at any angle between 0° and +10°. **(Power frequency clearance)**	(mm)	900	500

Note: In case of new tower design, the actual maximum angle deflection of suspension sets, and/or conductor, and/or weighted jumper loops and/or pilot suspension sets shall be calculated with the wind load.

Annex 8.9(2) Electrical Clearances - Live Metal & Earthed Steelwork

Please also refer to the Bid Drawings, Section 22, Volume 2 of 3 of the bidding documents.

	Description	Unit	400kV– Not applicable
(a)	Minimum clearance between a conductor and tower metal for suspension sets without any deflection.	(mm)	3100
(b)	Minimum clearance between a conductor and tower metal for suspension sets deflected position under the weather case corresponding to Lightning Impulse Clearance (LIC).	(mm)	2800
(c)	Minimum clearance between a conductor and tower metal for suspension sets deflected position under the weather case corresponding to Power Frequency Clearance (PFC).	(mm)	1830
(d)	Minimum clearance between a conductor and tower metal for jumper suspension sets without any deflection.	(mm)	3100
(e)	Minimum clearance between a conductor and tower metal for jumper suspension sets deflected position under the weather case corresponding to Lightning Impulse Clearance (LIC).	(mm)	2800
(f)	Minimum clearance between a conductor and tower metal for jumper suspension sets deflected position under the weather case corresponding to Power Frequency Clearance (PFC).	(mm)	1830

Note: In case of new tower design, the actual maximum angle deflection of suspension sets, and/or conductor, and/or weighted jumper loops and/or pilot suspension sets shall be calculated with the wind load.

Annex 8.9(3) Spatial Distances

			400kV– Not applicable	230kV	132kV
(a)	Minimum shielding angle of the earthwire (still air) from the vertical	(degrees)	0°	0°	30°
(b)	Maximum swing of the earthwire from vertical	(degrees)	85°	85°	85°
(c)	Minimum vertical spacing between adjacent phases	(m)	As per drawing	6.0	4.0
(d)	Minimum projected horizontally spacing between adjacent phases spaced vertically	(m)	-	-	-
(e)	Minimum vertical spacing between phase conductor and earthwire	(m)	8.0	5.1	3.2
(f)	Minimum horizontal spacing between adjacent phase conductors spaced horizontally.	(m)	-	-	-

Annex 8.9(4) Downlead Clearances

			400kV	230kV	132kV
(a)	The minimum clearance in still air at the assumed maximum conductor temperature between adjacent downleads shall not be less than.	(m)	4.2	2.3	1.5
(b)	In exceptional circumstances and with the approval of the Employer, based on the condition of maximum (opposing) conductor swing and sag, the clearance may be reduced to.	(m)	-	-	-

Annex 8-10: Anti-Climbing Devices (ACD), Access Facilities, Danger & Identification Plates

Annex 8.10(1) Anti-Climbing Devices (ACD)

			Required/Not Required
(a)	Barbed wire type at a minimum height above ground level	(m)	Not required
(b)	Spiked type at a minimum height above ground level	(m)	3.0
(c)	Bolt Locking		All bolts below the bottom crossarm level shall be locked by locknuts (anti-theft type).

Note: The contractor is required to propose the type of locknuts (anti-theft type) for necessary approval from the employer during execution stage and submit corresponding standards related to the proposed lock nuts. For pre-designed towers, bolt length may require to be revised. All costs related to bolt length revision and subsequent change in supply price, is deemed to be included in contract price.

Annex 8.10(2) Access Facilities

(a)	Step bolts	Fitted between Ground level & within 1m of top of towers
(b)	Ladders	Ladders are fitted all through between the ACD and Peak for river crossing suspension towers. For Predesigned towers existing drawing shall be followed.
(c)	Rest platforms	For river crossing suspension towers. As per BS 4211. For Predesigned towers existing drawing shall be followed.
(d)	Work platforms	Required for tension towers & river crossing towers at every Crossarm level. For Predesigned towers existing drawing shall be followed.
(e)	Fall arrest system	Every Crossarm

Annex 8.10(3) Danger &Identification Plates

(a)	Danger plate	Required
(b)	Tower number, circuit identification & phase colour plate	Required

Annex 8-11: Quality Control Weld Inspection Levels

Level 1: All welded items not covered by higher level of inspection

Level 2:

Level 3: Conductor attachment fittings for all types of towers.

Annex 8-12: Tower Test Requirements

Annex 8-12(1): Type Test Requirement – Not applicable

1) Tower Type 2QT6H+21m Body Extension

Annex 8-12(2): Proto Assembly Test Requirement

All towers with all extensions shall require proto assembly tests to be performed in the manufacturer's/test station's premises before starting the batch manufacturing of towers.

The shop drawings are required to be submitted in hardcopy and soft copy (AutoCAD) before proto assembly test. **This is a Hold Point.** After the successful proto assembly test, the shop drawings shall deem to be approved. The Contractor shall, then, provide the Employer complete sets of final soft copy (Auto CAD) and hardcopies of the drawings for reference purpose. The overall responsibility of fabricating tower members correctly lies with the Contractor only and the Contractor shall ensure that all the tower members can be assembled/ fitted while erecting without any undue strain on them.

All costs related to such tests shall deem to be included in the Contract Price.

Annex 8-12(3): Visual Check, Galvanizing Test and Mechanical Test of Members /Nuts & Bolts /Plates

Before mass (batch) fabrication/manufacturing of tower materials the Contractor shall submit the proto assembly test report of towers for acceptance of the Employer. The Contractor shall proceed mass fabrication of towers after acceptance of the said test report by the Employer. After mass fabrication, tower members shall visually check for dimension and galvanizing thickness (which shall include weight basis test also). Mechanical tests shall also be done on the finished tower materials.

All costs related to such tests shall be deemed included in the Contract Price.

Annex 8-13: Foundation Reaction Forces

Annex 8.13(1): 132kV Double Circuit Towers (Narrow Base Width) -

(Including Foundation Overload Factor 1.23)

Tower Type	Down Thrust (Along the Leg)	Uplift (Along the Leg)	Horizontal Component	
			Hx (Transverse)	Hz (Longitudinal)
	Kg	kg	kg	kg
1DL	115226	107703	772	772
1D1	190459	177936	3339	3339
1D25	264413	212986	5839	5839
1DT6 (Angle)	340720	258860	5853	5853
1DT6 (Terminal)	375471	433954	6537	6537

Annex 8.13(2) 132kV Four Circuit Towers-

(Including Foundation Overload Factor as 1.23 for 1QL and 1.35 for others)

Tower Type	Down Thrust (Along the Leg)	Uplift (Along the Leg)	Horizontal Component	
			Hx (Transverse)	Hz (Longitudinal)
	Kg	kg	kg	kg
1QL	127705	111399	4118	2449
1Q15	255355	229080	5531	4066
1Q30	306244	279876	6808	5344
1QT6 (Angle)	411063	364820	8929	7790
1QT6 (Terminal)	502180	459627	10039	8044

Annex 8.13(3) 230kV Double Circuit Towers

KEC INTERNATIONAL LTD.
TARDEO, MUMBAI-400036

FOUNDATION FORCES
FOR T.T. "2DT60"

SHEET NO. 222
DRG. NO.: C835//DES-4/REV-C

CONTRACT NO.:- PGCB/KfW/2012.66.436/NZTL
Dated:- 31.10.2017

Summary of maximum Foundation forces for STANDARD Tower /+1.5m/+3.0m/4.5m/6.0m/9.0m BE

Sr. No.	Model	Load Case	Support Joint	Origin Joint	Leg Member	Force In Leg Dir. (kN)	Residual Shear Perpendicular To Leg (kN)	Residual Shear Horizontal To Leg - Res. (kN)	Residual Shear Horizontal To Leg - Long. (kN)	Residual Shear Horizontal To Leg - Tran. (kN)	Total Long. Force (kN)	Total Tran. Force (kN)	Total Vert. Force (kN)
	Foundation Forces along LEG Direction												
1	Run #12 c835 tt 2dt60 +9m be with red.tow	LC-3_5 deg 22.5 deg diag wind-Vmax BI+60 deg,C BI+	11Y	10SF0.8	Fg68434Y	**4341.254**	72.237	72.913	7.755	72.5			
2	Run #12 c835 tt 2dt60 +9m be with red.tow	LC-3_5 deg 22.5 deg diag wind-Vmin BI+60 deg,C BI+	11X	10SF0.8	Fg68434X	**-4100.638**	69.402	69.983	10.418	69.203			
3	Run #7 c835 tt 2dt60 +0m be with red.tow	LC-11_5 deg Full trans wind Eccentric load -Vmin NA+ 0 deg t	10Y	APF0.75	Fg67380Y	-647.798	**241.922**	241.969	154.752	186.013			
4	Run #7 c835 tt 2dt60 +0m be with red.tow	LC-11_5 deg Full trans wind Eccentric load -Vmin NA+ 0 deg t	10Y	APF0.75	Fg67380Y	-647.798	241.922	**241.969**	154.752	186.013			
	Foundation Forces along Global (Vertical) Direction												
1	Run #7 c835 tt 2dt60 +9m be with red.tow	LC-3_5 deg 22.5 deg diag wind-Vmax BI+60 deg,C BI+	11Y								654.96	-735.21	**-4228.74**
2	Run #7 c835 tt 2dt60 +9m be with red.tow	LC-3_5 deg 22.5 deg diag wind-Vmin BI+60 deg,C BI+	11X								615.62	-695.24	**3994.71**
3	Run #7 c835 tt 2dt60 +9m be with red.tow	LC-3_5 deg 22.5 deg diag wind-Vmax BI+60 deg gw int,C BI+	11Y								653.89	**-736.21**	-4228.07
4	Run #7 c835 tt 2dt60 +9m be with red.tow	LC-1_5 deg Full trans wind-Vmin BI+ 0 deg trm gw int,C BI+	11S								**-673.27**	-696.5	-4093.88

Notes
1 Above loads are with Tower factored loads in kN without OLF for foundation design.
2 LAST LEG SECTION = H 250*250*28

POWER GRID COMPANY OF BANGLADESH
APPROVED
This approval is general only and does not
Release the manufacturer/contructor/supplier
From compliance with specification and
Standards for Design workmanship and
Performance as stipulated in the contract

KEC INTERNATIONAL LIMITED INDIA

(Engr. Muhammad Mahmudul Islam)
Sub-Divisional Engineer (TLD)
Design & Quality Control
PGCB Ltd.

(Engr. Md. Emdadul Hoque)
Executive Engineer
TLD & QC, PGCB, Dhaka

(Engr. S. M. Zafrul Hasan)
Superintending Engineer (TLD)
Design & QC, PGCB, Dhaka.

03 DEC 2018

Annex 8.13(4) 230kV Four Circuit Towers

SUMMARY OF FOUNDATION LOADS

PROJECT : 230 KV FOUR CIRCUIT TRANSMISSION LINE

CLIENT : PGCBL

SUSPENSION TOWER TYPE "2QL" (0^0 - 1^0 deg)

2QL WITH +12M BODY EXTENSION

NORMAL CONDITION :

PARELLAL TO LEG					LOAD CASE NO
Unit	COMPRESSION	UPLIFT	TRANS SHEAR	LONG SHEAR	
KN	2782.78	-2411.86	60.90	3.42	1
Kg	2,83,765	(2,45,943)	6,210	348	
KN	2717.26	-2460.98	61.49	3.48	16
Kg	2,77,085	(2,50,951)	6,270	355	
KN	2717.26	-2460.98	61.49	3.48	16
Kg	2,77,085	(2,50,951)	6,270	355	
KN	1009.28	-788.13	5.12	49.54	67
Kg	1,02,918	(80,367)	522	5,052	

BROKEN WIRE CONDITION :

PARELLAL TO LEG					LOAD CASE NO
Unit	COMPRESSION	UPLIFT	TRANS SHEAR	LONG SHEAR	
KN	2683.32	-2371.27	66.61	22.26	4
Kg	2,73,623	(2,41,803)	6,792	2,270	
KN	2608.43	-2424.09	71.74	17.54	25
Kg	2,65,987	(2,47,189)	7,315	1,789	
KN	2608.43	-2424.09	71.74	17.54	25
Kg	2,65,987	(2,47,189)	7,315	1,789	
KN	2473.08	-2236.97	66.53	30.06	24
Kg	2,52,185	(2,28,108)	6,784	3,065	

POWER GRID COMPANY OF BANGLADESH
APPROVED
This approval is general only and does not release the manufacturer/contructor/supplier from compliance with specification and Standards for Design workmanship and performance as stipulated in the contract

Md. Shoeb Hasan
Assistant Engineer
Design & QC (TLD-1)
PGCB Ltd. Dhaka.

(Engr. S.M. Zafrul Hasan)
Executive Engineer (TL-1)
Design & Quality Control
PGCB Ltd.

(Engr. Abdur Rashid Khan)
Superintending Engineer (TLD)
Design & QC, PGCB.

ASTER-HGPT JV

14 DEC 2014

Page 1 of 2

SUMMARY OF FOUNDATION LOADS

PROJECT : 230 KV FOUR CIRCUIT TRANSMISSION LINE

CLIENT : PGCBL

SUSPENSION TOWER TYPE "2QL" (0^0 - 1^0 deg)

2QL WITH +12M BODY EXTENSION

HIGH INTENSITY WIND CONDITION :

PARELLAL TO LEG					LOAD CASE NO
Unit	COMPRESSION	UPLIFT	TRANS SHEAR	LONG SHEAR	
KN	1244.72	-1007.08	42.50	43.90	3
Kg	**126,926**	(102,694)	4,334	4,476	
KN	1244.72	-1007.08	42.50	43.90	3
Kg	126,926	**(102,694)**	4,334	4,476	
KN	930.90	-690.67	70.28	0.17	1
Kg	94,925	(70,429)	**7,167**	17	
KN	1185.98	-945.82	0.26	72.62	4
Kg	120,937	(96,447)	26	**7,406**	

Notes :-

1) The above loads are calculated considering stub is along the tower leg
2) Stub Section HL 200x200x25
3) Stub Slope (First Slope) = 4.418^0
4) Above Foundation Loads are inclusive of Tower FOS/OLF (Over Load Factor) & Exclusive of Foundation Factor Of Safety.
5) Trans Shear & Long Shear values are inclusive of respective shear values at Concrete level.

POWER GRID COMPANY OF BANGLADESH
APPROVED
This approvel is general only and does not release the manufacturer/contructor/supplier from compliance with specification and Standards for Design workmanship and performance as stipulated in the contract

Md. Shoeb Hasan
Assistant Engineer
Design & QC (TLD-1)
PGCB Ltd. Dhaka.

(Engr. S.M. Zafrul Hasan)
Executive Engineer (TL-1)
Design & Quality Control
PGCB Ltd.

(Engr. Abdur Rashid Khan)
Superintending Engineer (TLD)
Design & QC, PGCB.

page - 2of 2

14 DEC 2014

MASTER-HGPT JV

SUMMARY OF FOUNDATION LOADS

PROJECT : 230 KV FOUR CIRCUIT TRANSMISSION LINE

CLIENT : PGCBL

HIGH SUSPENSION TOWER TYPE "2Q1" (0^0 - 3^0 deg)

2Q1 WITH +25M BODY EXTENSION

NORMAL CONDITION :

PARELLEL TO LEG					LOAD CASE NO
Unit	COMPRESSION	UPLIFT	TRANS SHEAR	LONG SHEAR	
KN	4314.75	-3620.37	89.35	3.16	1
Kg	4,39,984	(3,69,177)	9,111	323	
KN	4205.16	-3705.34	90.32	3.24	2
Kg	4,28,809	(3,77,841)	9,210	330	
KN	4205.16	-3705.34	90.32	-3.24	2
Kg	4,28,809	(3,77,841)	9,210	(330)	
KN	1374.54	-978.53	7.46	73.33	67
Kg	1,40,165	(99,783)	761	7,477	

BROKEN WIRE CONDITION :

PARELLEL TO LEG					LOAD CASE NO
Unit	COMPRESSION	UPLIFT	TRANS SHEAR	LONG SHEAR	
KN	3907.89	-3354.38	85.50	19.08	5
Kg	3,98,496	(3,42,052)	8,719	1,945	
KN	3817.06	-3419.79	86.46	18.92	6
Kg	3,89,233	(3,48,723)	8,817	1,930	
KN	3811.00	-3409.94	91.27	4.68	20
Kg	3,88,615	(3,47,719)	9,307	1,497	
KN	3704.92	-3288.94	85.47	25.25	16
Kg	3,77,798	(3,35,380)	8,715	2,574	

HIGH INTENSITY WIND CONDITION :

PARELLEL TO LEG					LOAD CASE NO
Unit	COMPRESSION	UPLIFT	TRANS SHEAR	LONG SHEAR	
KN	1713.90	-1289.12	67.74	68.23	123
Kg	1,74,770	(1,31,454)	6,908	6,958	
KN	1713.90	-1289.12	67.74	68.23	123
Kg	1,74,770	(1,31,454)	6,908	6,958	
KN	1337.56	-910.71	112.22	0.40	121
Kg	1,36,394	(92,867)	11,443	40.3	
KN	1591.04	-1164.23	0.41	113.11	124
Kg	1,62,242	(1,18,719)	41.7	11,534	

Notes :-

1) The above loads are calculated considering stub is along the tower leg
2) Stub Section HL 250x250x35
3) Stub Slope = 4.66^0
4) Above Foundation Loads are inclusive of Tower FOS/OLF (Over Load Factor) & Exclusive of Foundation Factor Of Safety.
5) Trans Shear & Long Shear values are inclusive of respective shear values at Concrete level.

Md. Shoeb Hasan
Assistant Engineer
Design & QC (TLD-1)
PGCB Ltd. Dhaka.

(Engr. S.M. Zafrul Hasan)
Executive Engineer (TL-1)
Design & Quality Control
PGCB Ltd.

(Engr. Abdur Rashid Khan)
Superintending Engineer (TLD)
Design & QC, PGCB

POWER GRID COMPANY OF BANGLADESH
APPROVED
This approvel is general only and does not release the manufacturer/contructor/supplier from compliance with specification and Standards for Design workmanship and performance as stipulated in the contract

15 APR 2015

ASTER-HGPT JV

SUMMARY OF FOUNDATION LOADS

PROJECT : 230 KV FOUR CIRCUIT TRANSMISSION LINE

CLIENT : PGCBL

ANGLE/TENSION TOWER TYPE "2Q15" (0^0 - 15^0 deg)

2Q15 WITH +9M BODY EXTENSION

NORMAL CONDITION :

PARALLAL TO LEG					LOAD CASE NO
Unit	COMPRESSION	UPLIFT	TRANS SHEAR	LONG SHEAR	
KN	6031.01	-5529.31	83.30	19.97	217
Kg	**6,14,994**	(5,63,835)	8,494	2,036	
KN	5938.21	-5604.96	83.86	20.28	218
Kg	6,05,531	**(5,71,549)**	8,551	2,067	
KN	1897.03	-1524.61	116.54	52.62	354
Kg	1,93,444	(1,55,467)	**11,884**	5,366	
KN	1739.48	-1410.79	48.67	108.12	367
Kg	1,77,378	(1,43,861)	4,963	**11,025**	

BROKEN WIRE CONDITION :

PARALLAL TO LEG					LOAD CASE NO
Unit	COMPRESSION	UPLIFT	TRANS SHEAR	LONG SHEAR	
KN	5571.84	-5148.26	112.83	33.83	273
Kg	**5,68,171**	(5,24,978)	11,506	3,450	
KN	5491.01	-5229.02	101.01	45.88	232
Kg	5,59,930	**(5,33,214)**	10,300	4,678	
KN	5571.84	-5148.26	112.83	33.83	273
Kg	5,68,171	(5,24,978)	**11,506**	3,450	
KN	5273.15	-4989.72	93.28	78.79	260
Kg	5,37,714	(5,08,811)	9,512	**8,034**	

POWER GRID COMPANY OF BANGLADESH
APPROVED
This approvel is general only and does not release the manufacturer/contructor/supplier from compliance with specification and Standards for Design workmanship and performance as stipulated in the contract

Md. Shoeb Hasan
Assistant Engineer
Design & QC (TLD-1)
PGCB Ltd. Dhaka.

(Engr. S.M. Zafrul Hasan)
Executive Engineer (TL-1)
Design & Quality Control
PGCB Ltd.

(Engr. Abdur Rashid Khan)
Superintending Engineer (TLD)
Design & QC, PGCB.

MASTER-HGPT JV

15 APR 2015

SUMMARY OF FOUNDATION LOADS

PROJECT : 230 KV FOUR CIRCUIT TRANSMISSION LINE

CLIENT : PGCBL

ANGLE/TENSION TOWER TYPE "2Q15" (0^0 - 15^0 deg)

HIGH INTENSITY WIND CONDITION :

PARALLAL TO LEG					LOAD CASE NO
Unit	COMPRESSION	UPLIFT	TRANS SHEAR	LONG SHEAR	
KN	1306.99	-920.13	56.30	56.09	435
Kg	**1,33,277**	(93,828)	5,741	5,720	
KN	1306.99	-920.13	56.30	56.09	435
Kg	1,33,277	**(93,828)**	5,741	5,720	
KN	1010.38	-622.98	92.91	-0.93	433
Kg	1,03,030	(63,527)	**9,474**	(95)	
KN	1232.65	-845.30	0.92	92.64	436
Kg	1,25,696	(86,197)	94	**9,446**	

Notes :-

1) The above loads are calculated considering stub is along the tower leg
2) Stub Section SL 200x200x25(H) (S-Stands for Star Leg)
3) Stub Slope = 5.84^0
4) Above Foundation Loads are inclusive of Tower FOS/OLF (Over Load Factor) & Exclusive of Foundation Factor of Safety.
5) Trans Shear & Long Shear values are inclusive of respective shear values at Concrete level.

POWER GRID COMPANY OF BANGLADESH
APPROVED
This approvel is general only and does not release the manufacturer/contructor/supplier from compliance with specification and Standards for Design workmanship and performance as stipulated in the contract

Md. Shoeb Hasan
Assistant Engineer
Design & QC (TLD-1)
PGCB Ltd. Dhaka.

(Engr. S.M. Zafrul Hasan)
Executive Engineer (TL-1)
Design & Quality Control
PGCB Ltd.

(Engr. Abdur Rashid Khan)
Superintending Engineer (TLD)
Design & QC, PGCB.

15 APR 2015

ASTER-HGPT JV

SUMMARY OF FOUNDATION LOADS

PROJECT : 230 KV FOUR CIRCUIT TRANSMISSION LINE

CLIENT : PGCBL

SUSPENSION TOWER TYPE "2Q30" (0^0 - 30^0 deg)

2Q30 WITH +9M BODY EXTENSION

NORMAL CONDITION :

PARALLAL TO LEG					LOAD CASE NO
Unit	COMPRESSION	UPLIFT	TRANS SHEAR	LONG SHEAR	
KN	6962.68	-6387.00	98.00	18.24	229
Kg	**709,998**	(651,296)	9,993	1,860	
KN	6872.44	-6465.76	98.47	18.40	230
Kg	700,796	**(659,327)**	10,041	1,877	
KN	2142.64	-1669.76	133.58	51.65	368
Kg	218,489	(170,269)	**13,621**	5,267	
KN	2008.29	-1535.58	61.90	114.30	380
Kg	204,790	(156,586)	6,312	**11,656**	

BROKEN WIRE CONDITION :

PARALLAL TO LEG					LOAD CASE NO
Unit	COMPRESSION	UPLIFT	TRANS SHEAR	LONG SHEAR	
KN	6188.06	-5704.96	111.73	41.82	243
Kg	**631,008**	(581,746)	11,393	4,265	
KN	6100.82	-5774.08	122.73	31.29	286
Kg	622,113	**(588,794)**	12,515	3,190	
KN	6168.23	-5706.57	122.92	31.43	285
Kg	628,987	(581,911)	**12,534**	3,205	
KN	6104.05	-5669.42	112.93	76.63	272
Kg	622,442	(578,122)	11,516	**7,815**	

POWER GRID COMPANY OF BANGLADESH
APPROVED
This [illegible] general only and does not release [illegible] ufacturer/contructor/supplier from [illegible] ance with specification and Stand[illegible] Design workmanship and perfo[illegible] stipulated in the contract

Md. Shoeb Hasan
Assistant Engineer
Design & QC (TLD-1)
PGCB Ltd. Dhaka.

(Engr. S.M. Zafrul Hasan)
Executive E[illegible]er (TL-1)
Design & Qu[illegible]y Control
PGCB Ltd.
12 MAR 2015

(Engr. Abdur Rashid Khan)
Superintending Engineer (TLD)
Design & QC, PGCB.

ASTER-HGPT JV

SUMMARY OF FOUNDATION LOADS

PROJECT : 230 KV FOUR CIRCUIT TRANSMISSION LINE

CLIENT : PGCBL

SUSPENSION TOWER TYPE "2Q30" (0^0 - 30^0 deg)

2Q30 WITH +9M BODY EXTENSION

HIGH INTENSITY WIND CONDITION :

PARALLAL TO LEG					LOAD CASE NO
Unit	COMPRESSION	UPLIFT	TRANS SHEAR	LONG SHEAR	
KN	1356.08	-879.15	63.48	63.44	3
Kg	**138,282**	(89,648)	6,474	6,469	
KN	1356.08	-879.15	63.48	63.44	3
Kg	138,282	**(89,648)**	6,474	6,469	
KN	1063.63	-586.02	104.89	1.13	1
Kg	108,460	(59,757)	**10,696**	115	
KN	1277.37	-799.78	1.15	104.84	4
Kg	130,255	(81,555)	117	**10,691**	

Notes :-

1) The above loads are calculated considering stub is along the tower leg
2) Stub Section SL 250x250x25(H) (S-Stands for Star Leg)
3 Stub Slope (First Slope) = 6.579^0
4) Above Foundation Loads are inclusive of Tower FOS/OLF (Over Load Factor) & Exclusive of Foundation Factor Of Safety.
5) Trans Shear & Long Shear values are inclusive of respective shear values at Concrete level.

COMPANY OF BANGLADESH
APPROVED
This approval is general only and does not relieve the manufacturer/contractor/supplier from compliance with specification and Standards or Design workmanship and performance as stipulated in the contract

Md. Shoeb Hasan
Assistant Engineer
Design & QC (TLD-1)
PGCB Ltd. Dhaka.

(Engr. S.M. Zafrul Hasan)
Executive Engineer (TL-1)
Design & Quality Control
PGCB Ltd.

(Engr. Abdur Rashid Khan)
Superintending Engineer (TLD)
Design & QC, PGCB.

12 MAR 2015

ASTER-HGPT JV

SUMMARY OF FOUNDATION LOADS

PROJECT : 230 KV FOUR CIRCUIT TRANSMISSION LINE

CLIENT : PGCBL

ANGLE TOWER TYPE "2QT6" (30^0-60^0)

2QT6 WITH +9M BODY EXTENSION

NORMAL CONDITION :

PARALLAL TO LEG					LOAD CASE NO
Unit	COMPRESSION	UPLIFT	TRANS SHEAR	LONG SHEAR	
KN	8986.40	-8118.95	113.04	21.11	1
Kg	**916,419**	(827,957)	11,527	2,153	
KN	8901.58	-8203.77	113.03	21.10	2
Kg	907,769	**(836,607)**	11,527	2,152	
KN	2693.90	-2062.34	149.20	57.37	163
Kg	274,720	(210,314)	**15,215**	5,851	
KN	2644.78	-1969.23	73.74	111.53	174
Kg	269,710	(200,819)	7,520	**11,374**	

BROKEN WIRE CONDITION :

PARALLAL TO LEG					LOAD CASE NO
Unit	COMPRESSION	UPLIFT	TRANS SHEAR	LONG SHEAR	
KN	7707.43	-6986.73	124.27	72.082	44
Kg	**785,991**	(712,495)	12,673	7,351	
KN	7574.92	-6991.80	134.55	36.93	58
Kg	772,478	**(713,012)**	13,721	3,766	
KN	7641.76	-6921.20	134.92	36.82	57
Kg	779,294	(705,813)	**13,759**	3,755	
KN	7707.43	-6986.73	124.27	72.082	44
Kg	**785,991**	(712,495)	12,673	**7,351**	

POWER GRID COMPANY OF BANGLADESH
APPROVED
This approval is general only and does not
Release the manufacturer/contructor/supplier
From compliance with specification and
Standards for Design workmanship and
Performance as stipulated in the contract

Md. Shoeb Hasan
Assistant Engineer
Design & QC (TLD-1)
PGCB Ltd. Dhaka.

(Engr. S.M. Zafrul Hasan)
Executive Engineer (TL-1)
Design & Quality Control
PGCB

(Abdur Rashid Khan)
Superintending Engineer(TLD)
Design & Quality Control
PGCB Ltd.

25 AUG 2015

ASTER-HGPT JV

SUMMARY OF FOUNDATION LOADS

PROJECT : 230 KV FOUR CIRCUIT TRANSMISSION LINE

CLIENT : PGCBL

ANGLE TOWER TYPE "2QT6" (30^0-60^0)

2QT6 WITH +9M BODY EXTENSION

HIGH INTENSITY WIND CONDITION :

PARALLAL TO LEG					LOAD CASE NO
Unit	COMPRESSION	UPLIFT	TRANS SHEAR	LONG SHEAR	
KN	1567.54	-811.61	72.67	74.07	395
Kg	**159,845**	(82,761)	7,410	7,553	
KN	1567.54	-811.61	72.67	74.07	395
Kg	159,845	**(82,761)**	7,410	7,553	
KN	1277.97	-547.73	120.22	9.06	393
Kg	130,317	(55,853)	**12,259**	923	
KN	1456.67	-699.70	1.44	115.40	396
Kg	148,539	(71,350)	147	**11,768**	

Notes :-

1) The above loads are calculated considering stub is along the tower leg
2) Stub Section SL 250x250x35(H) (S-Stands for Star Leg)
3) Stub.Slope = 7.287^0
4) Above Foundation Loads are inclusive of Tower FOS
5) Trans Shear & Long Shear values are inclusive of respective shear values at Concrete level.

POWER GRID COMPANY OF BANGLADESH
APPROVED
This approval is general only and does not Release the manufacturer/contructor/supplier From compliance with specification and Standards for Design workmanship and Performance as stipulated in the contract

Md. Shoeb Hasan
Assistant Engineer
Design & QC (TLD-1)
PGCB Ltd. Dhaka.

(Engr. S.M. Zafrul Hasan)
Executive Engineer (TL-1)
Design & Quality Control
PGCB

(Abdur Rashid Khan)
Superintending Engineer(TLD)
Design & Quality Control
PGCB Ltd

25 AUG 2015

MASTER-HGPT JV

SUMMARY OF FOUNDATION LOADS

PROJECT : 230 KV FOUR CIRCUIT TRANSMISSION LINE

CLIENT : PGCBL

TERMINAL TOWER TYPE "2QT6" (0^0-30^0)

2QT6 WITH +9M BODY EXTENSION

NORMAL CONDITION :

PARALLAL TO LEG					LOAD CASE NO
Unit	COMPRESSION	UPLIFT	TRANS SHEAR	LONG SHEAR	
KN	10063.26	-9107.42	120.19	98.62	387
Kg	**1,026,235**	(928,760)	12,257	10,057	
KN	9967.52	-9187.59	120.60	99.20	388
Kg	1,016,472	**(936,936)**	12,299	10,116	
KN	2875.77	-2110.85	221.89	167.76	323
Kg	293,267	(215,261)	**22,628**	17,108	
KN	2805.69	-2087.26	151.02	226.55	336
Kg	286,119	(212,855)	15,401	**23,103**	

BROKEN WIRE CONDITION :

PARALLAL TO LEG					LOAD CASE NO
Unit	COMPRESSION	UPLIFT	TRANS SHEAR	LONG SHEAR	
KN	7571.57	-6817.76	151.28	101.23	283
Kg	**772,136**	(695,264)	15,428	10,324	
KN	7505.91	-6865.00	150.25	103.42	284
Kg	765,440	**(700,082)**	15,323	10,546	
KN	6742.53	-6002.31	184.15	-145.33	285
Kg	687,592	(612,106)	**18,779**	(14,821)	
KN	6684.17	-6048.95	182.90	147.32	286
Kg	681,640	(616,862)	18,652	**15,023**	

POWERGRID COMPANY OF BANGLADESH
APPROVED
This approval is general and does not
Release the manufacturer/contractor/supplier
From compliance with specification and
Standards for Design workmanship and
Performance as stipulated in the contract

Md. Shoeb Hasan
Assistant Engineer
Design & QC (TLD-1)
PGCB Ltd. Dhaka

(Engr. S.M. Zafrul Hasan)
Executive Engineer (TL-1)
Design & Quality Control
PGCB

(Abdur Rashid Khan)
Superintending Engineer(TLD)
Design & Quality Control
PGCB Ltd.

ASTER-HGPT JV

25 AUG 2015

SUMMARY OF FOUNDATION LOADS

PROJECT : 230 KV FOUR CIRCUIT TRANSMISSION LINE

CLIENT : PGCBL

TERMINAL TOWER TYPE "2QT6" (0^0-30^0)

2QT6 WITH +9M BODY EXTENSION

HIGH INTENSITY WIND CONDITION :

	PARALLAL TO LEG				LOAD CASE NO
Unit	COMPRESSION	UPLIFT	TRANS SHEAR	LONG SHEAR	
KN	1567.54	-811.61	72.67	74.07	395
Kg	**159,845**	(82,761)	7,410	7,553	
KN	1567.54	-811.61	72.67	74.07	395
Kg	159,845	**(82,761)**	7,410	7,553	
KN	1277.97	-547.73	120.22	9.06	393
Kg	130,317	(55,853)	**12,259**	923	
KN	1456.67	-699.70	1.44	115.40	396
Kg	148,539	(71,350)	147	**11,768**	

Notes :-

1) The above loads are calculated considering stub is along the tower leg
2) Stub Section SL 250x250x35(H) (S-Stands for Star Leg)
3) Stub Slope = 7.287^0
4) Above Foundation Loads are inclusive of Tower FOS
5) Trans Shear & Long Shear values are inclusive of respective shear values at Concrete level.

POWER GRID COMPANY OF BANGLADESH
APPROVED
This approval is general only and does not Release the manufacturer/contructor/supplier From compliance with specification and Standards for Design workmanship and Performance as stipulated in the contract

Md. Shoeb
Assistant Engr.
Design & QC
PGCB Ltd.

(Engr. S.M. Zafrul Hasan)
Executive Engineer (TL-1)
Design & Quality Control
PGCB

(Abdur Rashid Khan)
Superintending Engineer(TLD)
Design & Quality Control
PGCB Ltd

25 AUG 2015

ASTER-HGPT JV

Annex 8.13(5): 4000kV Double Circuit Towers -**– Not applicable**

Note: Strength Factor Shall be as per Chapter 7.

Annex 8-14: Engineering Documents to be Submitted by Contractor

Clause Reference	Document Description	Comment
8.2.21	Design calculation	
8.2.22	Fabrication drawings	
8.6.1	Method statement - tower erection	
8.7.1	Material test certificates	
8.7.1	Bolt & nut test certificates	
8.7.2	Welding procedures	
8.7.2	Welder's test certificates	
8.7.2	NDT procedures	
8.7.2	NDT inspection reports	
8.7.5	Galvanising test records	If requested
8.7.5	Ingot zinc certificates	
8.7.5	Pot melt analysis	
8.7.7	Proto type tower test programme	
8.7.7	Proto type test reports	
8.7.8	Certificate of conformity	
8.7.9	Tower erection records	

Annex 8-15: Notification and Hold Points

Clause Reference	Notification Points	Hold Points
8.2.21		Design calculation
8.2.22		Fabrication drawings
8.4.3		Misplaces holes
8.4.4		Formation of bends
8.4.6		Erection marks
8.6.1		Method statement
8.6.5		Damaged galvanizing
8.7.2	Welding inspection/testing	Welding procedure
8.7.2		NDT organisation
8.7.2		NDT procedure
8.7.4		Proto type tower erection
8.7.7	Proto type tower test	Proto type tower test programme

Annex 8-16: Reference Standards

Thereferencestandardsandotherdocumentsreferredtointhisspecificationarelistedbelow:

IEC 60652:	Loading Tests on Overhead Line Towers
BS 4:	Structural Steel Sections, Part 1: Specification for hot rolled sections
BS 183:	Specification for general purpose galvanized steel wire strand
BS EN 10244-2:	Specification for testing zinc coatings on steel wire and for quality requirements.
BS EN 134411-1:	Specification for thimbles for wire ropes.
BS EN ISO 1461:	Specification for hot-dipped galvanizing coating, on iron and steel article.
BS 970:	Specification for wrought steel for mechanical and allied engineering purposes. General inspection and testing procedures and specific requirements for carbon, carbon manganese, alloy and stainless steel
BS EN 10083, 4, 5, 7, 8; BS EN 10095, BS EN 10250-4; BS PD 970; BS EN 515:	Specification for wrought aluminium and aluminium alloys for general engineering purposes bars, extruded round tubes and sections.
BS EN 573-3, 4; BS EN 755-1 to 9; BS EN 12020-1,2; BS 1574:	Specification for split cotter pins.
BS EN 1563:	Specification for spheroidal graphite or nodular graphite cast iron.
BS 3643:	ISO Metric screw threads. Part 2: Specification for selected limits of size
BS EN 1714:	Method of ultrasonic examination of welds. Method of manual examination of fusion welds in ferric steel.
BS 4102:	Steel wire and wire products for fences.
BS 4190:	Specification for ISO metric hexagon bolts, screws and nuts.
BS 4211:	Ladders for permanent access to chimneys, other high structures, silos and bins.
BS 4320:	Specification for metal washer for general engineering purposes. Metric series.
BS 4464:	Specification for spring, washers for general engineering and automobile.
BS 4592:	Industrial type metal flooring, walkways and stair treads. BS EN ISO 14122-1 to 3
BS EN 10210-2:	Hot rolled structural steel sections. Specification for hot-finished hollow sections.
BS EN 10056-1:	Equal and unequal angles.
BS EN 1011-1,2:	Specification for arc welding of carbon and carbon manganese steels
BS EN 970:	Code of practice. Visual inspection of fusion welded joints.
BS 5531:	Code of practice. For safety in erecting structural frames.

BS 5950:	Structural use of steelwork in buildings.
BS ISO 10160:	Methods of ultrasonic testing and specifying, quality grades of ferric steel plates.
BS EN ISO 9934:	Methods for magnetic particle flow detection.
BS EN 1562:	Specification for malleable cast iron.
BS EN 287:	Approval testing of welders for fusion welding.
BS EN ISO 15607:	Specification and approval of welding procedures for metallic materials.
BS EN ISO 15609; BS EN ISO 15610, 15611, 15612, 15613, 1561; BS EN 353:	Personal protective equipment against falls from heights
BS EN 353-1:	Guided type fall arresters including a rigid anchorage line.
BS EN 353-2:	Guided type fall arresters including a flexible anchorage line.
BS EN 360:	Personal protective equipment against falls from a height. Retractable type fall arrestors.
BS EN 1179:	Specification for Zinc & Zinc Alloys - Primary zinc.
BS EN 10024:	Hot rolled taper flange I-sections. Tolerance on shape and dimensions.
BS EN 10025:	Specification for hot rolled products of non-alloyed structural steels and their technical delivery requirements.
BS EN 10029:	Tolerance on dimensions, shape and mass of hot rolled steel plate 3 mm thick or above.
BS EN 10034:	Structural steel I and H sections. Tolerance on shape and dimensions.
BS EN 10056:	Specification for structural steel equal and unequal angles; Part 2: Tolerance on shape and dimension
BS EN 10163:	Delivery requirements for surface conditions of hot rolled steel plates, wide flats and sections. Part 1: General requirements; Part 2: Plates and wide flats; Part 3: Sections
BS EN 10210-1:	Hot finished structural hollow sections of non-alloy and fine grained structural steels- Technical delivery requirements
BS 8100-3	Code of Practice for strength assessment of members of lattice towers masts.
ANSI/ASCE Std 10-15	Design of Steel Transmission Towers.
BS EN 50341-1:2012:	Overhead electric lines exceeding AC 1 kV - Part 1: General requirements - Common specifications

ASCE Manual and reports on Engineering Practice no. 74. Guideline for Electrical Transmission Line, Structural Loading Third Edition.

9. Insulators

9.1 Scope

Both, the type of insulator unit and insulator set, whether suspension or tension used on each type of support, shall be approved, and shall have proven use under similar environmental and operational conditions.

Insulator strings shall comprise of porcelain disc insulator units. All types of insulators to be supplied under this Contract shall be supplied from the same manufacturer.

Please refer to **Annex 9-1** for details of the specific requirements.

9.2 Design

9.2.1 General

All insulator units shall be designed to withstand the design service voltages including lightning, switching and power frequency, the mechanical loads relevant to the installation-service- maintenance conditions, the service temperature and environmental effects. Internal stresses due to expansion and contraction of any part of the insulator unit shall not lead to deterioration.

The design of insulator units shall be such as to avoid local corona formation and no significant radio interferences shall be exhibited. Cap &pin insulator units shall comply with the general requirements of the IEC 60305 standard, except where specified otherwise in this Specification and insulator units shall have straight head design to avoid concentration of mechanical stress. Cross section sketch of insulators unit showing the head design is included in the enclosed Drawing Section of this specification.

9.2.2 Electrical and Mechanical Characteristics

The individual insulator units shall be complete insulator sets shall have the electrical and mechanical characteristics stated in **Annex 9-2**

9.2.3 Couplings

Couplings between individual insulator units shall be as specified in **Annex 9-1.** Ball and socket couplings shall be in accordance with the requirements of IEC 60120. Sockets shall either have W type security clips, or a split pin (R) clip in accordance with the requirements of IEC 60372 as specified.

9.2.4 Pollution

The design of insulator units shall take into account the principles contained in IEC 60815 for the specified pollution category. However, minimum creepage values (mm/kV) shall be as specified.

9.2.5 Zinc Sleeve

Cap and pin insulator units shall where specified be fitted with zinc sleeve pins to prevent cracking due to pin corrosion caused by the effects of pollution and high humidity. The exposed part of the sleeve shall have a mass of at least 5 (five) gram and metallurgic alloy bonded to the insulator pin.

9.2.6 Insulator Protective Device

The design of insulator protective fittings including corona shields shall comply with the following requirements:

a) Shall effectively protect the insulator units, and the fittings from damage caused by power arcs;
b) Shall effectively improve the voltage distribution along the insulator string;
c) Shall effectively improve the corona performance of the insulator set;
d) Shall be designed in such a way as not to be subject to breakage fatigue due to wind induced vibration;
e) Shall withstand a specified mechanical load.
f) Shall be suitable where specified for live-line maintenance.

For details of the materials, workmanship and quality control requirements for insulator protective fittings reference shall be made to Section 10 of this specification.

9.2.7 Low Duty Insulator Sets

Low duty tension sets shall be used for the downleads between terminal supports and substation gantry structures or other positions where the conductor tensions are of a reduced value. At the lower end of the downleads the low duty tension sets shall be capable of having their units reversed.

9.2.8 Tension Insulator Sets-Earth End Linkages

Additional earth end adjustable linkages shall be provided where necessary to ensure that either the specified clearance is maintained between the tension insulator set and the support body/crossarm, or that satisfactory pairing is achieved between the phase sub-conductors.

9.3 Materials

9.3.1.1. High grade, wet process porcelain used in the manufacturer of insulator units shall comply with the requirement of IEC 60672.

9.3.1.2. Insulator caps and bases of malleable cast iron shall be manufactured from a suitable grade of MCI complying with the requirement of BS EN 1563 for spheroidal graphite, or BS EN 1562 for white heart and pearlytic. Ductile cast iron of suitable grade may be used for caps and bases.

9.3.1.3. Insulator end fittings of forced or cast aluminium alloy shall be manufactured from a suitable grade of aluminium alloy complying with the requirements of BS EN 515, 573, 586, 603, 604 or BS EN 1559, 1676, 1706 and/or BS EN 1676 or equivalent respectively.

9.3.1.4. Security 'W' clips shall be of phosphor-bronze composition in accordance with the requirements of BS EN 1172, 1652, 1653, 1654 or equivalent and supplied in the half-hard condition with a minimum harness of 155 VPN.

9.3.1.5. Security 'R' clips shall be of austenitic stainless steel capable of complying with the requirements of relating to inter-crystalline corrosion tests of BS 970: Part 1 and BS EN 10084, 10085, 10087, 10095, 10250 and PD 970.

9.3.1.6. Zinc sleeve shall have a total impurity not greater than 0.2 percent and shall comply with the requirement of BS EN 1179 or equivalent.

9.4 Workmanship

9.4.1 Insulator Units

9.4.1.1. The dimensions of all insulator units, together with materials and grades and other pertinent information shall be shown on the contract drawings. Contract drawings shall be submitted to the Engineer. **This is a Hold Point.**

9.4.1.2. Particular regard shall be paid to those dimensions which involve interchangeability, correct assembly and those for which gauges are specified. Where appropriate insulator caps and pins shall comply with the requirement of IEC 60120, IEC 60372 and IEC 60471.

9.4.1.3. Porcelain shall be sound, thoroughly vitrified and free from defects and blemishes which might adversely affect the life of the insulator units.

9.4.1.4. Cement used in the construction of an insulator unit shall not fracture by virtue of expansion, nor loosen by contraction and proper care shall be taken to locate the individual parts correctly during assembly. The cement shall not give rise to chemical reaction with metal fittings nor the zinc collars. The cement thickness shall be as uniform as possible.

9.4.1.5. All insulator caps and bases are to be free from flaws, blowholes and shall be of a close-grained quality.

9.4.1.6. Insulator pins shall be round, free from cracks, surface flaws, lamination and other defects.

9.4.1.7. The zinc sleeve shall not be porous and all mould lines shall be removed. The cement level shall be approximately at the mid-point of the sleeve.

9.4.2 Identification and Marking

All insulator units shall be marked to ensure a system of traceability. Each unit shall be clearly and indelibly marked as follows on the insulating component according to the requirements of IEC 60383-1:

a) Electromechanical failing load;
b) Name or trade mark of the manufacturer;
c) Year of manufacture.

9.4.3 Installation Criteria

The manufacturer shall where necessary provide comprehensive instructions in a suitable format regarding, the handling and installation of insulator units.

9.4.4 Erection

9.4.4.1. The Contractor shall provide the Engineer with a method statement giving sequential details of the proposed erection method. The method statement shall be submitted to the Employer, the requisite period before insulator set erection commences. **This is a Hold Point.**

9.4.4.2. Care shall be exercised in the handling and erection of insulator units to prevent scratches, chipping or cracking of the insulation medium.

9.4.4.3. The Engineer shall be reasonable entitled to request the removal and destruction of any insulator units from a string which they notice has been severely handled or knocked during erection. All units which are scratched, chipped or abraded shall be removed and replaced. Insulator units and fittings shall be laid on plastic sheets prior to erection and any foreign matter shall be removed prior to installation.

9.4.4.4. The Contractor shall ensure that insulator units are not strained or damaged in any way during, erection.

9.4.4.5. All bolt threads shall be coated with an approved grease immediately before erection.

9.5 Protective Treatment

9.5.1 All insulator caps, bases and pins shall either be inherently resistant to atmospheric corrosion or suitably protected against corrosion, such as may occur in transit, storage and in service. All ferrous parts which will be exposed to the atmosphere in service, except those made in the appropriate grade of stainless steel, shall be protected by hot dipped galvanizing to comply with the requirements of BS ISO 1461. All manufacturing processes shall be completed prior to galvanizing.

9.5.2 The ingot zinc used for galvanizing shall comply with the requirements of BS EN 1179 or equivalent.

9.5.3 All galvanized materials shall be stored on packing, clear off the ground and away from all materials that might stain or corrode the galvanizing. Black steel packing, or bins shall not be used.

9.6 Quality Control

9.6.1 General

9.6.1.1 Type, sample and routine tests shall be undertaken on all insulator units and type tests on insulator sets in accordance with the requirements of this specification.

Details of the test requirements are summarized in **Table9.1**.

Acceptance criteria for thermal mechanical performance test and electromechanical failing (EMT) load test shall be governed by the following, formula, irrespective of sample size:

$$3 \leq C = (X\text{-}SFL) / \sigma$$

where,
C = Acceptance constant
X = Mean value of failing load
SFL = Specified EMT load
σ = Standard deviation

Test result of each sample shall not be less than the specified EMF load. The results (mean value and standard deviation) of thermal-mechanical performance test shall not differ from the results of the ordinary electro-mechanical failing load tests.

In addition, electrical puncture shall not occur before ultimate fracture.

Contract drawings previously submitted to the Employer shall be available at the time of testing.

The Contractor shall give the Employer the requisite period of notice prior to undertaking the tests, and shall submit to the Employer a test program and procedures. **This is a Hold Point.**

Table 9-1: Test Requirements

Test	Insulator Units Cap & Pin (Type B)	Insulator Sets
Type Tests:		
Verification of dimensions	X	-
Dry lightning impulse withstand voltage	X	X
Wet power frequency withstand voltage	X	X
Thermal mechanical performance	X	-
Mechanical or EMF load	X	-
Radio Interference Voltage (RIV)	X	X
Pollution performance		X a)
Power arc	X	X

Test	Insulator Units Cap & Pin (Type B)	Insulator Sets
Impulse voltage puncture	X	-
Zinc sleeve	X	-
Residual strength	X	-
Sample Tests:		
Verification of dimensions	X	-
Verification of locking system and displacement	X	-
Temperature cycle test	X	-
Mechanical or EMF load	X	-
Porosity	X	-
Galvanizing	X	-
RIV	X	-
Impulse Voltage puncture	X	-
Zinc sleeve test	X	-
Head design test	X	-
Routine Tests:		
Visual inspection	X	-
Mechanical	X	-
Electrical	X	-

a) $U_m \leq 245kV$;

9.6.2 Type Tests

(i) Insulator Units

Type test reports issued from independent reputed testing laboratory as listed below, outside the Manufacturer's country for insulator units which shall include the following tests performed on all the offered types of insulators as per IEC except power arc test which shall conform to test procedures outlined in this Clause:

- Verification of dimensions
- Dry lightning impulse voltage withstand test;
- Wet power frequency voltage withstand test;
- Electro-mechanical failing load test;
- Thermal mechanical performance test;
- Radio Interference Voltage (RIV)
- Impulse voltage puncture test
- Power arc test
- Zinc Sleeve Test
- Residual Strength Test

A list of independent reputed testing laboratories acceptable to the Employer is mentioned below:

- KEMA Laboratories in the Netherlands
- Powertech High Power Laboratories in Canada
- Kinectrics, Canada
- IREQ Montreal in Canada
- CESI in Italy
- Vattenfall in Sweden
- Veiki VNL in Hungary

(ii) Insulator Sets

Type tests of insulator sets shall be comprising of cap and pin insulator units being completed with all appropriate same fittings including insulator protective fittings manufactured by the same manufacturer. The tests of the insulator sets shall be undertaken in accordance with the requirements of IEC 60383-2, to determine the;

(a) Dry lightning impulse withstand voltage,
(b) Wet switching impulse withstand voltage and the power frequency withstand voltage as appropriate,

Following type tests shall also be performed as per the procedure mentioned in this specification:

(a) Radio Interference & Corona test
(b) Power Arc Test

If the type tests for insulator sets are not available as offered combination of insulator & fitting manufacturer (except low duty sets) with proposed design, the tests shall be performed in laboratories mentioned in Clause 9.6.2 (i) during execution stage in presence of Employer's Engineers. Cost of such test and witness shall deem to be included in the Contract Price.

The manufacture shall submit details of the proposed simulation of the support structure and mounting arrangement of the insulator sets to the Employer. **This is a Hold Point.**

Following procedures shall be followed for relevant tests:

1. Radio Interference & Corona

Radio interference type tests shall be under-taken both on single insulator units followed by a complete insulator set test. All radio noise measurements shall be made at a frequency of 1.0 MHz (9 kHz band width), using a radio interference measuring set having a response conforming to CISPR Publication 18. The test circuit shall conform to IEC 60437 and shall be calibrated in-situ to determine any circuit losses. The set shall be adjusted to indicate correctly, or alternatively an appropriate correction (in dB) shall be added to the measurement. Ideally the measurement shall be made using a 300 ohm load resistance. All readings shall be converted to dB above 1µV across 300 ohms, taking into account any corrections necessary.

The test voltage shall be as mentioned in the **Annex 9-2**.

The single unit test voltage shall be that which would appear across the live end unit in the complete set test and shall be determined by an initial voltage distribution measurement.

Before final readings of the radio noise are taken it is permissible to wipe the unit with a dry clean cloth, and to condition it at not more than 50% above the test voltage for up to 2 minutes. This may be repeated if the first measurement exceeds the first level.

The maximum permitted radio noise levels per insulator unit shall not exceed the values stated in **Annex 9-2**.

The number of units tested shall be either 1.5 times the number of units in a complete string or six units whichever is the greater. The choice of set make up to be tested shall be that likely to give the

highest voltage across the live end unit with the shortest arc gap. Three pairs of units shall be selected from those previously tested as single units (the most noisy units).

Each pair shall comprise the live end and penultimate live end unit of a single string or the pair of live end units for a duplex string, each pair shall be tested in turn in the set.

The radio noise test voltage and limits shall be in accordance with IEC 60437. None of the tests shall give rise to radio noise levels exceeding the specified limits. Each set shall also be tested for visible corona extinction. Light shall be excluded from the laboratory and the observer's eyesight allowed time to become accustomed to the dark. The voltage shall be increased until corona appears on the string. The voltage shall be gradually reduced until all discharges on the string are extinguished. The extinction voltage shall be measured and the minimum corona extinction voltage shall be as per Annex 9-2. All appropriate action shall be taken to eliminate discharges from test equipment, thereby avoiding spurious corona observations and radio inference readings.

2. Pollution

Artificial pollution tests (salt fog method) in accordance with the requirements of IEC 60507 shall be undertaken.

The salinity of the salt solution and the power frequency withstand voltage shall be in accordance with **Annex 9-3.**

3. Power Arc Tests

a. Power Arc Test for complete Insulator Set.
Power arc tests to simulate the effect of short circuit current shall be undertaken on the complete insulator set.
The power arc current shall be in accordance with **Annex 9-2**.
Acceptance criteria shall be as per IEC 61467.

b. Power Arc Test for Insulator Unit.
Power arc test shall also be performed to prove the ability of the insulator units to withstand the heat generated by power arc. This test shall be performed in the following manner:
Nine (9) insulator units of each type shall be chosen for the power arc test. Tests shall be conducted on the above chosen insulator units in three (3) strings of three (3) insulator units each. Strings shall be mounted vertically without arcing horns or conductors. The current and duration of power arc shall be 12kA (symmetrical r.m.s) and 0.1s or 6kA (symmetrical r.m.s) and 0.2 s.
No shed breakage shall occur during the power arc test. Peeling-off or bum out of glaze on the insulator surface and partial rib chip shall be permitted. If two or more insulator units string break in the power arc test, this insulator design is considered to have failed to meet the specifications. In case one insulator unit fails in the test, re-test on another nine (9) insulator units shall be conducted in the same manner. Failure of anyone unit in the re-test means that the insulator design has failed to meet the specification.

4. Impulse Voltage Puncture Tests

Impulse voltage puncture tests shall be undertaken in accordance with the requirements of IEC 61211.

5. Residual Strength Tests

Residual strength tests shall be undertaken in accordance with the recommendations of IEC 60797. With all the outer shed material removed, the insulator stubs shall be capable of withstanding 80% of the rated minimum failing load for 1 minute.

The test shall be continued to destruction (where it is practicable) to obtain a representative value of the actual falling load, and allow the modes of failure to be determined.

9.6.3 Sample Tests

9.6.3.1. The Contractor shall, give the Employer the requisite period of notice prior to undertaking Sample Tests. **This is a Notification Point.**

9.6.3.2. Sample tests for string insulator (cap & pin) insulator units shall be undertaken in accordance with the requirements of IEC 60383-1, see also Table 9-1.

9.6.3.3. Sample tests in respect of radio noise shall be undertaken on single units only in accordance with the **requirement** of Clause 9.6.2 of this specification. The sample size shall be as per ANSI C29-2 for radio noise test.

9.6.3.4. The **number** of sample to be checked regarding the metallurgical bond of the zinc sleeve to the pin shall be in accordance with IEC 61325.

9.6.3.5. The metallurgical purity of the zinc shall be established by chemical analysis to ensure that any impurities **do** not sensitize the zinc to intergranular corrosion.

9.6.3.6. The zinc sleeve of each sample tested for mechanical strength shall also be inspected according to IEC 61325, to **ensure** no radial and circumferential cracking has occurred.

9.6.3.7. Three insulators shall be selected at random from each lot of the order and their straight head design checked against the straight head design of the manufacturer's cross-section drawing.

9.6.4 Routine Tests

Routine tests for string insulator (cap and pin) insulator units shall be undertaken in accordance with the requirements of IEC 60383-1, see also Table 9-1.

9.6.5 Galvanizing

Tests for galvanized insulator caps, bases and pins shall be carried out at the works to ensure compliance with the requirements of ISO 1461. Details of the test results shall be made available to the Employer upon request.

Certificates relating to the ingot zinc used for galvanizing shall also be made available to the Employer upon request.

9.6.6 Test Certificates

9.6.6.1 All metallic materials used in the manufacture of insulator caps, bases and pins shall be covered by test certificates stating their mechanical, chemical and where specified the impact properties and clearly showing the cast numbers to prove compliance with the requirements of this specification and BS EN 1563, BS EN 1562, BS 970 and BS EN 10084, BS EN 10085 etc., BS EN 515, 573, 586, 603, 606, BS EN 1559, 1676, 1707, BS EN 1172, 1652, 1653, 1654, BS EN 1179 as appropriate.

9.6.6.2 Test certificates for metallic materials and bolts shall be made available to the Employer upon request.

9.6.6.3 Test certificates covering type and sample tests shall be made available to the Employer upon request.

9.6.7 Certificate of Conformity

When requested copies of the following certificates/records shall also be forwarded:

a) Routine test records
b) Metallic material test certificates
c) Galvanizing test records
d) Ingot zinc certificates
e) Metallurgical purity test records for zinc sleeve.

9.6.8 Installation

The Contractor shall be responsible for checking that all insulator sets are complete and that all bolts, split pins and security clips have been correctly installed. A record of this work shall be kept by the Contractor and made available to the Employer upon request.

Annex 9-1: Insulator Types and Uses

1. 400kV Line (Overland Portion) - Quad Finch/Quad Chuker/Quad ACCC Dhaka – Not applicable

Insulator Set Type	Suspension / Heavy Suspension	Tension	Low Duty Tension	Jumper Suspension
Nominal system voltage	400kV			
String configuration	Twin	Twin	Single	Single
Reference drawing				
Insulator unit type	Cap & pin type disc insulator			
Coupling type as per IEC60305	Ball & socket			
Insulating material	Porcelain			
Security clip type	R			
Zinc sleeve	Required			
Head design	Straight head			

2. 400kV Line (Overland Portion) - Twin Finch– Not applicable

Insulator Set Type	Suspension / Heavy Suspension	Tension	Low Duty Tension	Jumper Suspension
Nominal system voltage	400kV			
String configuration	Single/Twin	Twin	Single	Single
Reference drawing				
Insulator unit type	Cap & pin type disc insulator			
Coupling type as per IEC60305	Ball & socket			
Insulating material	Porcelain			
Security clip type	R			
Zinc sleeve	Required			
Head design	Straight head			

3. 400kV Line (River Crossing Portion) - Quad Finch – Not applicable

Insulator Set Type	Suspension	Tension
Nominal system voltage	400kV	
String configuration	Triple	Triple
Reference drawing		
Insulator unit type	Cap & pin type disc insulator	
Coupling type as per IEC60305	Ball & socket	
Insulating material	Porcelain	
Security clip type	R	
Zinc sleeve	Required	
Head design	Straight head	

4.400kV Line (River Crossing Portion) - Twin Finch – Not Applicable

Insulator Set Type	Suspension	Tension
Nominal system voltage	400kV	
String configuration	Twin	Twin
Reference drawing		
Insulator unit type	Cap & pin type disc insulator	
Coupling type as per IEC60305	Ball & socket	
Insulating material	Porcelain	
Security clip type	R	
Zinc sleeve	Required	
Head design	Straight head	

5. 230kV Line (Overland Portion)

Insulator Set Type	Suspension / Heavy Suspension	Tension	Low Duty Tension	Jumper Suspension
Nominal system voltage	230kV			
String configuration	Single	Twin	Single	Single
Reference drawing				
Insulator unit type	Cap &pin type disc insulator			
Coupling type as per IEC60305	Ball &socket			
Insulating material	Porcelain			
Security clip type	R			
Zinc sleeve	Required			
Head design	Straight head			

6. 230kV Line (River Crossing Portion) – Not Applicable

Insulator Set Type	Suspension	Tension
Nominal system voltage	400kV	
String configuration	Twin	Twin
Reference drawing		
Insulator unit type	Cap & pin type disc insulator	
Coupling type as per IEC60305	Ball & socket	
Insulating material	Porcelain	
Security clip type	R	
Zinc sleeve	Required	
Head design	Straight head	

7. 132kV Line

Insulator Set Type	Suspension / Heavy Suspension	Tension	Low Duty Tension	Jumper Suspension
Nominal system voltage	132kV			
String configuration	Single	Single	Single	single
Reference drawing				
Insulator unit type	Cap &pin type disc insulator			
Coupling type as per IEC60305	Ball &socket			
Insulating material	Porcelain			
Security clip type	R			
Zinc sleeve	Required			
Head design	Straight head			

8. 132kV Line (River Crossing Portion) – Not applicable

Insulator Set Type	Suspension	Tension
Nominal System Voltage	{…….....132kV…….. .....…….}	
String Configuration	Twin	Twin
Reference Drawing		
Insulator Unit type	{.....….....Cap & Pin type disc insulator.....}	
Coupling Type as per IEC 60305	{…….....…… Ball & Socket ……....…….}	
Insulating Material	{…….....…… Porcelain ……....…….}	
Security Clip type	{…….....…….R ……....…..}	
Zinc Sleeve	{…….....Required…….....…..……..}	
Head design	{…….....Straight Head…….....……..}	

Annex 9-2: Electrical & Mechanical Characteristics

1(1). 400kV Line (Overland Portion) –Applicable V-String Tower– Not applicable

Parameter / Insulator Set Type		Suspension	Heavy Suspension	Jumper Suspension	Tension	Upright Low Duty	Inverted Low Duty
Pollution category		Medium II					
Nominal creepage	mm	8400					
Insulator type		Cap & pin type disc insulators					
Insulator unit reference		U210B	U210B	U210B	U400B	U210B	U210B
Glaze colour		Grey	Grey	Grey	Brown	Grey	Grey
Unit puncture voltage	kV	125	125	125	140	125	125
Number of insulator units per string		2x2x24 Considering V-Type	2x2x24 Considering V-Type	24	2 x 17	24	24
Dielectric material		Porcelain					
Dry lightning impulse withstand voltage of insulator set	kV	1425					
Standard Switching Impulse withstand voltage of insulator set	kV	950					
Power arc for insulator set							
Current	kA	31.5					
Duration	s	0.5					
Power arc for string insulator units: Current for duration	kA for s	12 for 0.1 or 6 for 0.2					
Arc gap nominal	mm	3050	3050	3050	3050	3050	3050
RIV level per unit	δB	37					
RIV level per set	δB	50					
Test voltage for RIV & Corona	kV	260					
Mechanical/electromechanical failing load	kN	2 x 2 x 210	2 x 2 x 210	210	2 x 400	210	210

1(2). 400kV Line (Overland Portion) –Applicable I-String Tower**– Not applicable**

Parameter / Insulator Set Type		Suspension	Heavy Suspension	Jumper Suspension	Tension	Upright Low Duty	Inverted Low Duty
Pollution category		Heavy III					
Nominal creepage	mm	10500					
Insulator type		Cap & pin type disc insulators					
Insulator unit reference		U210BP	U210BP	U210BP	U400B	U210BP	U210BP
Type of shed Profile		Fog	Fog	Fog	Normal	Fog	Fog
Glaze colour		Grey	Grey	Grey	Brown	Grey	Grey
Unit puncture voltage	kV	125	125	125	140	125	125
Number of insulator units per string		2x23	2x23	23	2x20	23	23
Dielectric material		Porcelain					
Dry lightning impulse withstand voltage of insulator set	kV	1425					
Standard Switching Impulse withstand voltage of insulator set	kV	950					
Power arc for insulator set							
Current	kA	31.5					
Duration	s	0.5					
Power arc for string insulator units: Current for duration	kA for s	12 for 0.1 or 6 for 0.2					
Arc gap nominal	mm	3050	3050	3050	3050	3050	3050
RIV level per unit	δB	37					
RIV level per set	δB	50					
Test voltage for RIV & Corona	kV	260					
Mechanical/electromechanical failing load	kN	2 x 210	2 x 210	210	2 x 400	210	210

2. 400kV Line (River Crossing Portion) – Not applicable

Parameter / Insulator Set Type		Suspension	Tension
Pollution category		Medium II	
Nominal creepage	mm	8400	
Insulator type		Cap & pin type disc insulators	
Insulator unit reference		U300B	U400B
Glaze colour		Grey	Brown
Unit puncture voltage	kV	140	140
Number of insulator units per string		3x 23	3x 17
Dielectric material		Porcelain	
Dry lightning impulse withstand voltage of insulator set	kV	1425	
Standard Switching Impulse withstand voltage of insulator set	kV	950	
Power arc for insulator set			
Current	kA	31.5	
Duration	s	0.5	
Power arc for string insulator units: Current for duration	kA for s	12 for 0.1 or 6 for 0.2	
Arc gap nominal	mm	3050	3050
RIV level per unit	δB	37	
RIV level per set	δB	50	
Test voltage for RIV & Corona	kV	260	
Mechanical/electromechanical failing load	kN	3x 300	3x 400

3.230kV Line (Overland Portion)

Parameter / Insulator Set Type		Suspension/ Jumper Suspension	Heavy Suspension	Tension (Twin)	Upright Low Duty	Inverted Low Duty
Pollution category		Medium II				
Nominal creepage	mm	4900				
Insulator type		Cap &pin type disc insulators				
Insulator unit reference		U120B	U210B	U210B	U120B	U120B
Glaze colour		Grey	Brown	Brown	Grey	Grey
Unit puncture voltage	kV	110	125	125	110	110
Number of insulator units per string		17	14	2 x 14	17	17
Dielectric material		Porcelain				
Dry lightning impulse withstand voltage	kV	1050				
Wet power frequency withstand voltage	kV	460				
Power arc for insulator set						
Current	kA	31.5				
Duration	s	0.5				
Power arc for string insulator units: Current for duration	kA for s	12 for 0.1 or 6 for 0.2				
Arc gap nominal	mm	2100	2100	2100	1910	1910
RIV level per unit	δB	36				
RIV level per set	δB	45				
Test voltage for RIV & Corona	kV	150				
Mechanical/electromechanical failing load	kN	120	210	2 x 210	120	120

4. 230kV Line (River crossing Portion) – Not Applicable

Parameter / Insulator Set Type		Suspension	Tension
Pollution category		Medium II	
Nominal creepage	mm	4900	
Insulator type		Cap & pin type disc insulators	
Insulator unit reference		U210B	U300B
Glaze colour		Grey	Brown
Unit puncture voltage	kV	125	140
Number of insulator units per string		2x 14	2x 13
Dielectric material		Porcelain	
Dry lightning impulse withstand voltage of insulator set	kV	1050	
Standard Switching Impulse withstand voltage of insulator set	kV	460	
Power arc for insulator set			
Current	kA	31.5	
Duration	s	0.5	
Power arc for string insulator units: Current for duration	kA for s	12 for 0.1 or 6 for 0.2	
Arc gap nominal	mm	3050	3050
RIV level per unit	δB	36	
RIV level per set	δB	45	
Test voltage for RIV & Corona	kV	150	
Mechanical/electromechanical failing load	kN	2x 210	2x 300

5. 132kV line (ACSR Grosbeak)

Parameter / Insulator Set Type		Suspension/ Jumper Suspension	Heavy Suspension	Tension	Upright Low Duty	Inverted Low Duty
Pollution category		Medium II				
Nominal creepage	mm	2900				
Insulator type		Cap &pin type disc insulators				
Insulator unit reference		U70BL	U120B	U120B	U70BL	U70BL
Glaze colour		Grey	Brown	Brown	Grey	Grey
Unit puncture voltage	kV	110	110	110	110	110
Number of insulator units per string		10	10	11	11	11
Dielectric material		Porcelain				
Dry lightning impulse withstand voltage	kV	650				
Wet power frequency withstand voltage	kV	275				
Power arc for insulator set						
Current	kA	31.5				
Duration	s	0.5				
Power arc for string insulator units: Current for duration	kA for s	12 for 0.1 or 6 for 0.2				
Arc gap nominal	mm	1120	1120	1120	1000	1000
RIV level per unit	δB	30				
RIV level per set	δB	40				
Test voltage for RIV & Corona	kV	85				
Mechanical/electromechanical Failing load	kN	70	120	120	70	70

6. 132kV line (ACSR Finch) – Not Applicable

Parameter / Insulator Set Type		Suspension/ Jumper Suspension	Heavy Suspension	Tension	Upright Low Duty	Inverted Low Duty
Pollution category		Medium II				
Nominal creepage	mm	2900				
Insulator type		Cap &pin type disc insulators				
Insulator unit reference		U120B	U210B	U210B	U120B	U120B
Glaze colour		Brown	Grey	Grey	Brown	Brown
Unit puncture voltage	kV	110	125	125	110	110
Number of insulator units per string		10	10	10	10	10
Dielectric material		Porcelain				
Dry lightning impulse withstand voltage	kV	650				
Wet power frequency withstand voltage	kV	275				
Power arc for insulator set						
Current	kA	31.5				
Duration	s	0.5				
Power arc for string insulator units: Current for duration	kA for s	12 for 0.1 or 6 for 0.2				
Arc gap nominal	mm	1120	1120	1120	1000	1000
RIV level per unit	δB	30				
RIV level per set	δB	40				
Test voltage for RIV & Corona	kV	85				
Mechanical/electromechanical Failing load	kN	120	210	210	120	120

Annex 9-3: Type Test - Pollution IEC 60507

Salt solution salinity	Not required
Remaining Tests	Please refer to this specification

Annex 9-4: Engineering Documents to be Submitted by Contractor

Clause Reference	Document Description	Comment
9.4.1	Insulator units - contract drawings	
9.4.3	Installation procedures	Where necessary
9.4.4	Erection - method statement	
9.6.1	Insulator units - type test certificates	If tests waived
9.6.1	Insulator sets - type test certificates	If tests waived
9.6.1	Type test - programme & procedure	
9.6.1	Details of support simulations	
9.6.5	Galvanising, test results	If requested
9.6.5	Ingot zinc certificates	If requested
9.6.6	Material test certificates	If requested
9.6.6	Insulator units - type test results	
9.6.6	Insulator units - sample test results	
9.6.6	Insulator units - routine test results	If requested
9.6.7	Certificates of conformity	
9.6.8	Installation records	If requested

Annex 9-5: Notification and Hold Points

Clause Reference	Notification Point	Hold Point
9.4.1		Contract drawings
9.4.4		Method statement
9.6.1		Insulators - type tests
9.4.4		Type tests - support simulation details
9.6.8	Insulator - sample tests	

Annex 9-6: Reference Standards

The reference standards and other documents referred to in this section of the specifications are listed below:

IEC 60120:	Dimensions of ball and socket couplings of string, insulator units
IEC 60305:	Characteristics of string, insulator units of cap and pin type
IEC 60372:	Locking devices for ball and socket coupling of string insulator units - Dimensions and tests
IEC 60383:	Insulators for overhead lines with a nominal voltage above 1000V
Part 1:	Ceramic or glass insulator units for ac systems - Definitions, test methods and acceptance criteria
Part 2:	Insulator string and insulator sets for ac - Definitions, test method and acceptance criteria
IEC 60437:	Radio interference tests on high voltage insulators
IEC 60471:	Dimensions of clevis and tongue couplings of string insulator units
IEC 60507:	Artificial pollution tests on high-voltage insulators to be used on a.c. systems
IEC 60672:	Specification for ceramic and glass insulating materials
IEC 60797:	Residual strength of string, insulator units of glass or ceramic, materials for overhead lines after mechanical damage of the dielectric
IEC 60815:	Guide for selection of insulators in respect of polluted conditions
IEC 61211:	Insulators of ceramic material or glass for overhead lines with a nominal voltage greater than 1000V - Puncture testing
IEC 61325:	Insulators for overhead lines with nominal voltage > 1000 V
ISO 1461:	Specification for hot-dipped galvanizing coating on iron and steel articles
BS EN 10084:	Specification for wrought steel for mechanical and applied Engineering purposes
BS EN 10085; BS EN 10087; BS EN 10095; BS EN 10250; PD 970; BS EN 515:	Specification for wrought aluminium and aluminium alloy
BS EN 573; BS EN 586; BS EN 603; BS EN 604; BS EN 1559:	Specification for Aluminium and aluminium alloy ingots and casting for general engineering purposes
BS EN 1676; BS EN 1706; BS EN 1172:	Specification for Rolled Copper and Copper Alloys: Sheet, strip and foil
BS EN 1652; BS EN 1653; BS EN 1654; BS EN 1563	Spheroidal graphite cast iron

BS 4190:	Specification for ISO metric hexagon bolts, screws and nuts
BS 5252:	Framework for colour coordination of buildings
BS EN 1562	Specification for malleable cast iron
BS EN 1179:	Specification for Zinc & Zinc Alloys
BS EN 1676:	Aluminium & aluminium alloys - Alloyed ingots for re-melting
CISPR:	Publication 1 Specification for CISPR radio interference measuring apparatus for the frequency range 0.15 to 30 MHz.
BS EN 50341-1:2012:	Overhead electric lines exceeding AC 1 kV - Part 1: General requirements - Common specifications

10. Insulator and Conductor Fittings

10.1 Scope

10.1.1 Types and Uses

The type and arrangement of all insulator and earthwire sets inclusive of all insulator and earthwire set fittings, suspension clamps, conductor tension fittings and insulator protective devices shall be approved. Please refer to **Annex10-1, Annex10-2 and Annex10-3** for details of the specific requirements.

10.2 Design

10.2.1 General

10.2.1.1. All insulator and conductor fittings shall be designed so as to:

a. avoid damaging the conductor under all service conditions;
b. withstand the mechanical loads relevant to the installation-service-maintenance conditions, the design service current including short circuit effects, the service temperature and environmental effects;
c. be free from visible and audible corona discharge and radio interference at the voltage levels specified, except those designed exclusively for use on earthwires;
d. minimize the number of parts and the possibility of incorrect assembly and installation;
e. ensure that individual components are secured against becoming loose in service, and all threaded fasteners shall be locked;
f. Compression fittings after compression shall not permit relative movement between the individual layers of the conductor.
g. from material, which have sufficient strength, ductility and environmental resistance to withstand the static and dynamic loading.

10.2.1.2. Where appropriate insulator and conductor fittings shall be in accordance with the requirements of IEC 61284. Ball and socket coupling shall be in accordance with the requirements of IEC 60120. Socket fitting shall be designed for 'W' type security clips or 'R' type security pins in accordance with the requirements of IEC 60372 as appropriate, clevis tongue couplings shall be in accordance with the requirements of IEC 60471.

10.2.1.3. All factory formed helical fittings shall be performed with a right hand lay and shall completely enclose the conductor except for small gaps required to ensure that all rods make good contact with the conductor over their entire length.

10.2.2 Live-Line Working

Where live-line working is specified in **Annex 10-1** the design of the fittings shall take into account the following requirements:

a. both suspension and tension insulator sets shall include either clevis fittings, or yoke plates incorporating cut-outs correctly dimensioned suitable for live-line working;
b. the minimum distance between the attachment point and the shoulder for clevis fittings shall not be less than 125 mm, where no yoke plate is adjacent;
c. clevis and tongue and clevis-clevis connections shall be provided with 'R' type security pins;
d. insulator protective devices attached to yoke plates shall utilise captive bolts.

10.2.3 Sag Adjusters

All tension insulator sets shall incorporate sag adjusters for adjusting the sag of either Individual phase conductors or sub-conductors forming a phase conductor bundle. The total range of linear adjustment and individual steps shall be as specified in **Annex 10-1**.

When specified low-duty tension insulator sets shall incorporate a turnbuckle for adjusting the sag of the complete downlead. The turnbuckle where appropriate shall comply with the requirements of BS 4429 and shall be fitted with locknuts. The total range of linear adjustment shall be as specified in **Annex10-1.** The turnbuckle shall be fitted in the earth end of the low duty tension insulator set.

10.2.4 Insulator Protective Fittings:

10.2.4.1 The design of insulator protective fittings including corona shields shall comply with the following requirements:

a. shall effectively protect the insulator units, and the fittings from damage caused by power arcs;
b. shall effectively improve the voltage distribution along the insulator string;
c. shall effectively improve the corona performance of the insulator set;
d. shall be designed in such a way as not to be subject to breakage fatigue due to wind induced vibration;
e. shall withstand a specified mechanical load.

10.2.4.2 For details of the materials, workmanship and quality control requirements for insulator protective fittings reference shall be made to clauses10.3, 10.4&10.6 of this Section 10.

10.2.4.3 The end of all arcing horns shall be formed into smooth hemispheres. The end of tubular arcing horns shall also be sealed.

10.2.5 Electrical and Mechanical Characteristics

The insulator and earthwire set fittings, suspension clamps, conductor tension fittings and insulator protection devices shall have the electrical and mechanical characteristics specified in **Annex 10-1, Annex 10-2 and Annex 10-3.**

10.2.6 Suspension Clamps

Suspension clamps shall be designed to meet the following requirements:

a. so that the effects of vibration both on the conductors, or the earthwire and on the clamp themselves are minimised;
b. to avoid localised pressure or damage to the conductor or earthwire, and shall have sufficient contact surface to avoid damage by fault currents;
c. shall be free to pivot in the vertical plane of the conductor/earthwire and shall have a minimum range of movement of plus or minus 30 degrees;
d. shall have a slipping capacity between specified minimum and maximum slipping loads so as to meet the requirement of Clause10.6.2.2 of this specification;
e. suspension clamp assemblies shall have sufficient strength and durability to prevent deterioration in service;
f. The mouth of the suspension clamp shall be rounded and slightly flared, with a minimum radius of curvature in the vertical plane of 150 mm.

10.2.7 Earthwire Suspension Clamps

Where specified earthwire suspension clamps and all suspension clamps for use with earthwire with embedded optical fibre cable and ADSS optical fibre cable shall be of the armour grip type, generally in accordance with the requirements of Clause 10.6.2.2, except that they shall be capable of being used in conjunction with factory formed helical armour rods and neoprene liners.

10.2.8 Counterweights

When specified, counterweights shall either be fitted below the suspension clamp by extension of the clamp-keeper retaining bolts, by attachment to the yoke plate, or by replacement of the complete assemblies for multi-bundled conductors for use with pilot suspension insulator sets.

Where the complete clamp assembly is replaced, the counterweight shall be fitted with permanently bonded aluminium liners and all retaining bolts, nuts and washers shall not protrude beyond the cylindrical section of the weight.

10.2.9 Connectors and Joints

Connections and joints shall be designed to meet the following requirements:

a. that after installation the initial contact area of the fitting to the conductor or earthwire does not raise stresses which may lead to failure under aeolian vibration or other conductor oscillation conditions;
b. localized pressures which may cause excessive cold flow of the conductor or earthwire shall be avoided;
c. to minimize internal voids and to prevent the ingress of moisture during service;
d. full tension joints (dead ends and mid-spans) shall not permit slipping of, or cause damage to, or failure of the complete conductor or any part thereof at a load less than 95% of the rated ultimate strength of the conductor;

e. non tension joints and connectors shall not permit slipping of, or cause damage to the conductor at a load less than 25% of the rated ultimate strength of the conductor;

f. those connectors and joints with auxiliary eyes intended for use during construction or maintenance shall be marked with the specified minimum failing loaded stated by the manufacturer.

10.2.10 Tee Connector

Tee connectors shall be as specified either interlocking compression type or bolted type.

10.2.11 Full Tension Joints (Dead End)

Full tension joints (dead end) shall be of the following types:

a) Compression

Compression dead ends shall have either integral jumper terminals or jumper terminal flags for use with bolted jumper palms. Integral jumper terminals shall either be straight or 30 degree line type.

b) Bolted

Bolted dead ends shall be designed to ensure that once the bolts have been tightened to the manufacturer's recommended torque, no slackening of the clamp can occur.

c) Wedge

Wedge clamps shall be designed with the attachment straps. The body and the wedges shall be of forged aluminium alloy. The body shall be hinged and the design shall incorporate dovetail interlocking wedges and body. The performance of the clamp shall be unaffected by manufacturing tolerances in the wedges and the bodies. The design of the conductor guide assembly shall ensure that it is possible to tighten the bolts with the wedge clamp straps assembled in their correct position.

d) Factory Formed Helical

For details of the exact requirements reference shall be made to **Annex 10-3.**Helical dead ends for earthwires or ADSS optical fibre cables shall be supplied complete with solid thimbles in accordance with the requirements of BS EN 1311-1.

10.2.12 Full Tension Joints (Mid-Spans)

Full tension mid-span joints shall be of the compression type, joints for metallic conductors shall include a longitudinal centering key. Joints for mono-metallic conductors shall include a central barrier stop to ensure correct longitudinal centering of the joint.

10.2.13 Non-Tension Joints

Non-tension joints shall be of the following types:

a) Disconnectable

Disconnectable joints shall comprise two identical straight palms, and shall be supplied complete with bolt assemblies. Bolt assemblies shall consist of bolts and nuts, grade 8.8/8 in accordance with BS 4190 complete with load spreading washers.

b) Non-disconnectable

Non-disconnectable joints shall be of the compression type.

c) Jumper Palms

Jumper palms for connecting jumper loops to dead ends, or tee connectors shall be of the compression type with either straight or 30 degree lugs. Bolt assemblies shall be in accordance with requirements specified for disconnectable joints.

10.2.14 Repair Sleeves

Repair sleeves shall be either compression types, or factory formed helical type. The compression type shall be two part interlocking sleeve or key type. Reference shall be made to Annex 10-3 for the specified requirements.

Repair sleeve shall be designed to make good a conductor of which not more than one-third of the strands of the outermost layer have been severed.

10.2.15 Line Termination Fittings

Line termination fittings shall be either bimetallic or aluminium. Bi-metallic fittings shall be designed to prevent corrosion between dissimilar metals, they shall include both a waterproof barrier at the end of the compression termination and a waterproof joint adjacent to the substation equipment terminal.

Reference shall be made to **Annex 10-3** for the specific requirements.

10.2.16 Armour Rods

Armour rods shall be of the factory formed helical type and comprise sets of individual rods compatible with the conductor. The rods shall completely enclose the conductor except for small gaps required to ensure that all the rods make good contact with the conductor over the entire length.

10.2.17 Jumper Weights

Jumper weights for multi-bundled phase conductors shall be fitted with permanently bonded aluminium liners, and all retaining bolts, nuts and washers shall not protrude beyond the section of the weight.

10.2.18 Tubular Jumpers

Tubular jumpers where specified shall be supplied complete with integral compression jumper terminals. Earthing bars for tubular jumpers shall have captive locking bolts opposite to the hinge bolt. The earthing bar shall be of solid aluminium rod.

10.2.19 Earthwire Bonding Clamps

Earthwire bonding clamps for the connection of flexible earthwire bonds to the earthwire shall be explosively applied wedge tap assemblies C-type, in accordance with the requirements of BS EN 61238-1 Part 3. For OPGW termination positions the C-type connectors shall be complete with a lug. The lug shall have a 18 mm diameter hole.

10.2.20 Earthwire Bond

Earthwire bonds shall be manufactured from multi-strand, multi-wire fatigue resistant aluminium alloy to BS EN 50183, with a minimum nominal cross sectional area of 100mm². The overall bond and individual strands shall be thoroughly greased with an approved conductor grease (see clause 11.3.2), before being covered by an extruded flexible PVC sheath, of minimum thickness 1.5 mm.

The bond shall be fitted with either a compression type lug or a compression type pin 20 mm diameter as appropriate. Compression lugs shall accommodate either M 16 or M 12 bolts.

10.3 Materials

10.3.1 Insulator and Conductor Fittings

10.3.1.1. Materials used in the manufacture of insulator and conductor fittings shall be of:

a. adequate strength for the intended application and service life requirements (including mechanical loads, vibrations, electrical currents and environmental effects) and free from defects which would affect the performance of the fitting;
b. shall not be liable to intergranular or stress corrosion;
c. the materials of compression fittings shall be capable of withstanding the cold working of the material due to compression;
d. steel compression components shall have sufficient impact strength after compression;
e. compatible with the conductor material, or capable of being used with an intermediate material such that there can be no deterious effects on the conductor, or fittings resulting from their use;
f. the material shall not be adversely affected in the long term by a coating applied for corrosion protection.

10.3.1.2. All phase conductor fittings shall have aluminium or aluminium alloy only in contact with the phase conductor.

10.3.1.3. All mild and high tensile steel used in the manufacture of insulator and conductor fittings including suspension saddles shall comply with the requirements of BS EN 10025. Minimum steel grades shall be S275JR and S355JO for mild and high tensile steel respectively.

10.3.1.4. Tubular steel used in the manufacture of insulator protective fittings shall be medium steel complying with requirements of BS 1387. Forged steel fittings shall be made from steel of suitable grade, complying with the requirements relating to the inter-crystalline corrosion tests of BS 970: Part 1.

10.3.1.5. Malleable cast iron fittings shall be made from white heart or pearlitic MCI or spheroidal graphite MCI of a suitable grade complying with the requirements of BS EN 1562 or BS EN 1563 respectively.

10.3.1.6. Forged aluminium and aluminium alloy fittings shall be made from aluminium or aluminium alloy of a suitable grade, complying with the requirements of BS EN 515, 573, 586, 603 and 604.

10.3.1.7. Cast aluminium and aluminium alloy fittings shall be made from aluminium or aluminium alloy of a suitable grade, complying with the requirements of BS EN 1559, 1676 and 1706.

10.3.1.8. Twin-single bridging plates shall be manufactured from 99.9% pure EC grade aluminium.

10.3.1.9. Bolts and nuts shall be either ISO metric black hexagon to BS 4190, and shall unless otherwise specified be threaded ISO metric course pitch to BS 3643: Part 2, tolerance class 7h/8g, or ISO metric precision hexagon to BS 3692.

10.3.1.10. Flat washers shall either comply with the requirements of BS 4320, form E, grade 4.6, or ISO metric to BS 4320, 'bright series'. Spring washers shall be ISO metric to BS 4464.

10.3.1.11. Split pins including 'R' type security pins shall comply with the requirements of BS 1574 and IEC 60372 respectively, and shall be of austenitic stainless steel capable of complying with the requirements relating to the inter-crystalline corrosion tests of BS 970: Part 1 and BS EN 10084, 10085, 10087, 10095, 10250 and PD 970.

10.3.1.12. Security 'W' clips shall be of phosphor-bronze composition in accordance with BS EN 1172, 1652, 1653 and 1654, and supplied in half-hard condition with a minimum hardness of 155 VPN.

10.3.1.13. Non-metallic materials used shall have:

a. good resistance to ageing;
b. capable of withstanding service temperatures without detrimental change of properties;
c. adequate resistance to the effects of nitrogen oxides, ozone, ultra-violet radiation and air pollution over the whole range of service temperatures.

10.3.2 Oxide Inhibiting Compound

Compression fittings shall be filled with oxide inhibiting compounds prior to despatch from the manufacturers with the ends of the fittings temporarily protected. The quantity of oxide inhibiting compounds shall be sufficient to ensure the integrity of the fitting.

Where grease is used as an oxide inhibiting compound, it shall be of a neutral soft type with a high melting point, and shall be in accordance with the requirements of Clause 11.3.2.

10.4 Workmanship

10.4.1 General

10.4.1.1. The dimensions of all insulator and conductor fittings shall be shown on the contract drawings, together with material types and grades, protective treatment and any other pertinent information. Contract drawings shall be submitted to the Employer. **This is a Hold Point.** Particular regard shall be paid to those dimensions which involve interchangeability, correct assembly and those for which gauges are specified. Tolerances where appropriate shall be in accordance with the requirements of IEC 60372 or IEC 60471.

10.4.1.2. All castings shall be free from flaws, blowholes and shall be of a closed-grained quality. No repair of any casting shall be carried out without the approval of the Employer. **This is a Hold Point.**

10.4.1.3. The welding of all ferrous metals shall be carried out in accordance with BS EN 1011.

10.4.1.4. For river crossing suspension saddles all welding shall be undertaken in accordance with Clause 8.7.2. Inspection levels shall be level 4 or 5 as appropriate for fillet and butt welds, except that 100% of each welder's output shall be tested.

10.4.1.5. Ball ended fittings shall be free from cracks, surface flows, laminations and other defects.

10.4.1.6. Fittings shall be free from sharp edges, burrs and swarf, particular attention shall be paid to insulator protective devices to prevent corona in service. The faces of flat faced fittings shall be sufficiently parallel and flat to provide a suitable contact service and shall remain so after fabrication. In addition care shall be taken to remove any surface contaminates prior to packing, other than material introduced by the manufacturer as a protective measure.

10.4.1.7. The mouth of suspension and top (trunnion) clamps, counterweight, wedge and bolted jumper weight clamps shall be free of sharp radius of curvature, ridges or other irregularities which may lead to localised pressure or damage to the conductors, or the separation of individual strands.

10.4.1.8. Factory formed helical fittings shall have rounded ends, when used with ADSS optical fibre cable the ends shall be relieved.

10.4.2 Identification and Marking

All insulator and conductor fittings shall be marked to ensure a system of traceability for each component part of the fittings. Where practicable, and unless otherwise agreed between the Engineer and the manufacturer, fittings shall be clearly and indelibly marked with minimum 3 mm high characters as follows:

a. Identification of fitting (reference number/specified minimum failing load);
b. Maker's identification;
c. Date of manufacture (month and year);
d. Cast code - if appropriate;
e. Conductor size or diameter range or code name - if appropriate;

f. Fitting bolt installation torque - if appropriate;
g. Compression die size - if appropriate;
h. Length and direction to be compressed - if appropriate.

In the case of factory formed helical fittings, the information as required above shall be provided on tear-off labels; additionally they shall be marked with paint to an agreed colour code either at the cross-over point or at the centre of the fitting.

10.4.3 Installation Criteria

10.4.3.1 The supplier shall provide comprehensive instructions in a suitable format covering the selection and installation, including the installation torque of any bolt, compression die sizes and direction of compression.

10.4.3.2 Installation instructions shall include directions for the use of any additional materials to the fittings, including the selection of such materials and of the conductor preparation.

10.4.3.3 Joints and connectors intended for the restoration of electrical and mechanical properties of a conductor, shall have clearly defined manufacturer's instructions as to the extent of the damage which they are intended to repair.

10.5 Protective Treatment

10.5.1. All parts of insulator and conductor fittings shall be either inherently resistant to atmospheric corrosion or suitably protected against corrosion, such as may occur in transit, storage and in service. All ferrous parts which will be exposed to the atmosphere in service, except those made in appropriate stainless steel, shall be protected by hot-dipped galvanizing to comply with the requirements of BS ISO 1461. All manufacturing processes shall be completed prior to galvanizing.

10.5.2. The ingot zinc used for galvanizing shall comply with the requirements of BS EN 1179.

10.5.3. All external threads shall be cut or rolled before hot-dipped galvanized. Nuts to be galvanized shall be subsequently tapped 0.4 mm oversize with the threads oiled.

10.5.4. Where tubular steel insulator protective fittings are provided with galvanizing vent-holes, these holes shall be effectively plugged after galvanizing with zinc plugs.

10.5.5. The rough machined surfaces of bolted palm joints and aluminium line termination fittings shall be protected with a removable dry waterproof coating.

10.5.6. All galvanized materials shall be stored on packing, clear of the ground and away from all materials that might stain or corrode the galvanizing. Black steel packing or bin shall not be used.

10.6 Quality Control

10.6.1 General

10.6.1.1 Type, sample and routine tests shall be undertaken on insulator and conductor fittings in accordance with the requirements of this specification. Type and sample test requirements are detailed in Table 10-1. In addition to these tests Visual, Dimensional and Galvanizing tests are to be done during Type test and Sample test as per requirement of IEC 61284. Type tests specified in Table 10-1 shall be undertaken on a minimum of three samples, which shall be identical in all essential details, with the fittings to be supplied. Heat cycle tests shall be undertaken on four samples.

10.6.1.2 Contract drawings previously submitted to the Employer shall be available at the time of testing. The Contractor/Supplier shall give the Employer the requisite period of notice prior to undertaking the tests and shall submit to the Employer a test programme and procedures**. This is a Hold Point.**

10.6.1.3 In addition to the tests specified, when required by the Employer, type tests shall be undertaken on complete insulator sets. For details of these tests reference should be made to Section 9 of this specification.

Table 10-1: Type and Sample Test Requirements

Fitting	Name of Test					
	Mechanical	Resistance	Heat Cycle	Corona	Bolt Torque	Conductor Damage
Insulator set fittings	TS			T		
Earth set fittings	TS					
Insulator protective fittings	TS			T		
Suspension clamps	TS			T	TS	TS
Earthwire suspension clamps	TS				TS	TS
Counter weights				T	T	T
L.P.I. top (Trunnion) clamps	TS			T	T	T
Earthwire top (Trunnion) clamps	TS				T	T
Tee connectors (compression)	TS	TS	T		TS	
(bolted)	TS	TS	T			
Tension joints (dead ends)						
Compression	TS	TS	T	T		
Bolted	TS		T	T	TS	TS
Wedge	TS		T	T	TS	TS
Helical	TS		T	T		TS
Tension joints (mid-span)						
Compression	TS	TS	T			
Non-tensile joints						
Disconnectable	TS	TS		T		
Non-disconnectable	TS	TS		T		
Jumper palms	TS	TS			TS	
Repair sleeves						
Compression	TS	TS				

Fitting	Name of Test					
	Mechanical	Resistance	Heat Cycle	Corona	Bolt Torque	Conductor Damage
Helical	TS	TS				
Line termination fittings	TS	TS				
Armour rods						T
Jumper weights						TS
Tubular jumpers	TS	T		T		
Earthwire bonding clamps						T
Earthwire bonds		TS				

T = Type Tests, S = Sample Tests

10.6.2 Test Procedure

Each fitting shall withstand its specified minimum failing load for one minute, and shall be tested in a manner as far as practical to that in service. One sample shall if practical be taken to failure and the mode of failure recorded.

10.6.2.1 Insulator Protective Fittings

Insulator protective fittings shall be mechanically tested to withstand the specified loads for 1min without failure. A force of 1.8 kN shall be applied to the tip of suspension arc horns, and 0.9 kN to tension arc-horns. The direction of the force shall correspond to that which would be applied by a linesman with the insulator set in service.

10.6.2.2 Conductor/Earthwire Suspension Clamps

a) Tensile Test

The clamp supported by its trunnions as appropriate shall be installed at its recommended installation torque on a rigid bar of a suitable size and mounted, complete with the suspension straps, in the testing machine. A tensile load equal to half its specified minimum failing load applied to 90 degrees to the conductor axis at each side of the clamp. The load shall be steadily increased. This load shall be kept constant for 60 s. No failure shall occur after application of specified minimum failure load for 60 seconds..

b) Conductor Slip Test

A length of conductor shall be fitted into the clamp as per IEC 61284 and the clamp bolts tightened to the recommended torque. An axial tensile force shall be applied either to the conductor, or the clamp. The conductor shall not slip through the clamp below a load of 7kN or 5% of the nominal breaking load of the conductor, whichever is the greater value. The conductor shall slip through the clamp at a load not greater than 30% of the conductor minimum breaking load. The conductor shall not be damaged, other than some flattening of the strands.

10.6.2.3 Tension Joints, Tee Joints and Sleeves

The fitting shall be assembled in accordance with the manufacturer's instruction on conductors of the size and type with which it is to be used. The assembly shall be mounted in a tensile testing machine, the end fixings of the conductor shall be such as to prevent bird-caging or slipping of the individual strands. The length of conductor between fittings under test and any other clamp or joint in the test assembly shall not be less than 100 times the overall diameter of the conductor or 2.5m, whichever is less.

Compression type joints shall be assembled as per IEC 61284 on conductors of the size and type with which it is to be used. Load shall be applied as per IEC 61284 [alternative a]. The test shall be passed if no movement of the conductor relative to the joint/clamp and no failure of the joint/clamp or conductor occurs at or before the end of the application of the Specified Minimum Failure Load (≥95% of RTS of Conductor) for 60s.

For factory formed helical tension terminations, the fitting shall be assembled in accordance with the manufacturer's instructions. A tensile load of 40% of the conductor breaking load shall be applied and maintained for 1min. The load shall be relaxed and the fitting removed. The fitting shall be reapplied and the test repeated, after subsequent removal and replacement the test shall be continued as detailed above. Specified Minimum Failure Load shall be ≥95% of RTS of Conductor and shall be applied for 60s.

For wedge clamps the test shall be carried out on a maximum size body and minimum size wedges and on a minimum size body and maximum size wedge. The maximum and minimum sizes shall be defined by the Manufacturer.

The following additional requirement shall be applicable to wedge clamps:

A 5 kN load shall be applied to the assembly and the position of the wedges relative to the clamp body recorded;
Loads of 20, 30 and 40% of the conductor's nominal breaking load shall be applied to the conductor and the relative position of the wedges recorded. After the application of each load the torque on the wedge and conductor guide bolts shall be removed and no conductor slip, shall occur. After 40% of the load when the wedge bolts are released to check for no slip, it shall then be confirmed that the wedges and body may be separated with the recommended extractor tool;
The number of strands severed for repair sleeves shall be the nearest whole number to one- third of the total number of strands in the outermost layer and shall be severed at a uniform spacing along the conductor;
A tensile load of 50% of the breaking load of the conductor shall be applied and the conductor marked so that any relative movement of the fitting can be easily detected. Without any subsequent adjustment of the fitting, the load shall be increased to 95% of the breaking load and then reduced to 90% and held for 1min. There shall be no movement of the conductor relative to the fitting due to slip during this period of 1min and no failure of the fitting.

For tests on OPGW and ADSS fittings there shall be no degradation in the fibre optic signal strength after the completion of the test. The signal strength shall be measured using an OTDR.

10.6.2.4 Non-Tension Joints, Line Termination Fittings and Tubular Jumpers

A tensile load of 0.6kN shall be applied and the conductor marked so that any relative movement of the fitting can be easily detected. Without any subsequent adjustment of the fitting, the load shall be increased to 10% of the conductor's nominal breaking load and this load held for 1min. There shall be no movement of the conductor relative to the fitting due to slip during this period and no failure of the fitting.

10.6.2.5 Compression Fittings

All compression fittings after installation in accordance with the manufacturer's instructions shall remain straight after compression.

10.6.2.6 Resistance

The fitting shall be assembled in accordance with the manufacturer's instruction on a length of conductor. The electrical resistance shall be measured between two points on the conductor on either side of and immediately adjacent to, the fitting. The test shall be made with direct current. The current connections shall be at a distance of not less than 50 times the conductor diameter from the fitting. A micrometer having an accuracy of 0.1% with current reversal and averaging shall be used for measurement. The measured resistance shall not exceed 75% of the equivalent length of conductor.

10.6.2.7 Heat Cycle

Heat cycle tests shall be undertaken in accordance with the requirements of IEC 61284.

10.6.2.8 Current Pulse

In addition to the heat cycle test described in clause 10.6.1, non-tension fittings shall be subject to the current pulse test undertaken in accordance with the requirements of IEC 61284.

The test assembly shall be so arranged that current is passed through the fitting from the main conductor to the jumper conductor on tension joints (dead ends) and from the main conductor to the tee conductor on the tee joints.

10.6.2.9 Corona and RIV

All fittings, other than those used exclusively for earthwire application shall be erected as in service, (which may necessitate representation of the tower body) and subjected to a visible corona and RIV test. The test shall be undertaken in accordance with the requirements of IEC 61284.

10.6.2.10 Bolt Torque

The test shall be performed as per IEC 61284. The bolts shall be tightened to twice the recommended torque on the conductor. No damage shall occur to the fitting or its bolts at less than this torque.

10.6.2.11 Conductor Damage

The fitting shall be installed on the conductor and where appropriate the bolts tightened to the recommended torque. In the case of factory formed helical fittings, these shall be checked to ensure

that the rods make contact with the conductor over their entire length. The position of the fitting shall be marked and then removed from the conductor. No indentations in the outer strands of the conductor shall be present in the area of the fitting.

10.6.2.12 Galvanizing

Tests for galvanizing conductor and insulator fittings shall be carried out at the works to ensure compliance with the requirements of BS ISO 1461. Details of the tests results shall be made available to the Employer upon request.

Certificates relating to the ingot zinc used for galvanizing shall also make available to the Employer request.

10.6.3 Sample Tests

10.7.13.1. Sample tests identical to type tests shall be undertaken as indicated in Table 10.1. In addition, verification of compliance with the 'contract drawings' and surface finish compatible with the reference fitting shall also form part of the sample test.

10.7.13.2. The Contractor shall give the Employer the requisite period of notice prior to undertaking Sample Tests. **This is a Notification Point.**

10.7.13.3. The number of samples selected for test shall be in accordance with the following requirements, where 'p' is the numbers of fittings to be tested, and 'n' is the number of fittings produced in a batch.

$p = 1$ when $25 < n \leq 50$
$p = 2$ when $50 < n \leq 75$
$p = 3$ when $75 < n \leq 100$
$p = 4$ when $100 < n \leq 500$
$p = 4 + 1.5n/1000$ when $n > 500$

10.7.13.4. If the randomly selected samples meet the test requirement, the batch(es) shall be deemed to comply with Specification. In the event of any sample not meeting this requirement, a further set of 'p' samples shall be tested. Should any further failure occur the whole batch(s) from the samples have been selected shall be liable to rejection.

10.6.4 Routine Tests

Unless otherwise specified routine mechanical tests shall be undertaken on insulator set and suspension clamp castings and those fittings in which a weld is subject to service load, insulator protective fittings and tension joints.

All fittings, tested shall be subjected to the routine test load of 50 percent of the specified minimum failing load. The application of the test load for 30 seconds shall not cause any permanent deformation or damage

10.6.5 Test Certificates

10.7.16.1. All metallic materials used in the manufacture of conductor and insulator fittings shall be covered by test certificates stating their mechanical, chemical and where specified the impact properties and clearly showing the cast numbers, to prove compliance with the requirements of this specification and BS EN 10025, BS 970 and BS EN 10084, 10085, 10087, 10095, 10250, PD 970, BS EN 1562, BS EN 1563, BS EN 515, 573, 586, 603, 604, BS EN 1559, 1676, 1706, BS EN 1172, 1652, 1653, 1654, BS EN 1676 as appropriate.

10.7.16.2. Test certificates for metallic materials and bolts and nuts shall be made available to the Employer upon request.

10.7.16.3. Test results covering type and sample tests shall be made available to the Employer.

10.7.16.4. Test results covering routine tests shall be made available to the Employer upon request.

10.6.6 Certificates of Conformity

When requested copies of the following certificate/records shall also be forwarded:

a) Routine test records
b) Metallic materials and nuts/bolts test certificates
c) Galvanizing test records
d) Ingot zinc certificates.

Annex 10-1: Insulator Sets / Fittings - Types and Uses

Annex 10-1(1): Insulator Sets - Types & Uses - 400 kV (Overland Portion) – V-String (Quad Finch) – Not applicable

Insulator Set Type	Suspension	Heavy Suspension	Tension	Low Duty	Pilot Suspension
Reference drawing					
Set configuration	V-Type-Twin	V-Type-Twin	Twin	Single	Single
No. of insulator strings	2x2	2x2	2	1	1
Min. separation between centres of parallel strings (mm)	450	450	450	--	--
Coupling type	Ball & Socket	Ball & Socket	Ball & Socket	Ball & Socket	Ball & Socket
Security clip type	R	R	R	R	R
No. of sub-conductor	4	4	4	4	4
Sub-conductor spacing (mm)	450	450	450	450	450
Live line working	Required	Required	Required	Not required	Required
Sag adjuster type	-	-	Quadrant	Turnbuckle	-
Linear range (mm)	-	-	300	230	-
Increment (mm)	-	-	6	-	-
Overall set length (mm)	4700	4700	5200-5500	5200 (A) 5200-5500 (B)	4500
Min. failing load of complete set:					
Common to all conductors (kN)	2x2x210	2x2x210	2x400	210	210
Common to any two nos. conductors (kN)	-	-	400	210	210
Insulator protective devices: Type					
Live end	Raquet	Raquet	Raquet	Raquet	Raquet
Earth end	Single Point	Single Point	Single Point	Single Point	Single Point

(A) Upright (B) Inverted

Annex 10-1(2): Insulator Sets - Types & Uses - 400 kV (Overland Portion) – I String (Quad Finch/Quad Chuker/Quad ACSR Finch Equiv LL Conductor) – Not applicable

Insulator Set Type	Suspension	Heavy Suspension	Tension	Low Duty	Pilot Suspension
Reference drawing					
Set configuration	Twin	Twin	Twin	Single	Single
No. of insulator strings	2	2	2	1	1
Min. separation between centres of parallel strings (mm)	450	450	450	--	--
Coupling type	Ball & Socket	Ball & Socket	Ball & Socket	Ball & Socket	Ball & Socket
Security clip type	R	R	R	R	R
No. of sub-conductor	4	4	4	4	4
Sub-conductor spacing (mm)	450	450	450	450	450
Live line working	Required	Required	Required	Not required	Required
Sag adjuster type	-	-	Quadrant	Turnbuckle	-
Linear range (mm)	-	-	300	230	-
Increment (mm)	-	-	6	-	-
Overall set length (mm)	4700	4700	5200-5500	5200 (A) 5200-5500 (B)	4500
Min. failing load of complete set:					
Common to all conductors (kN)	2x210	2x210	2x400	210	210
Common to any two nos. conductors (kN)	-	-	400	210	210
Insulator protective devices: Type					
Live end	Raquet	Raquet	Raquet	Raquet	Raquet
Earth end	Single Point	Single Point	Single Point	Single Point	Single Point

(A) Upright (B) Inverted

Annex 10-1(3): Insulator Sets - Types & Uses - 400 kV (Overland Portion) - Twin Finch– Not Applicable

Insulator Set Type	Suspension/ Pilot Suspension	Heavy Suspension	Tension	Upright Low Duty	Inverted Low Duty
Reference drawing					
Set configuration	Single	Twin	Twin	Single	Single
No. of insulator strings	1	2	2	1	1
Min. separation between centres of parallel strings (mm)	-	450	450	--	--
Coupling type	Ball & Socket	Ball & Socket	Ball & Socket	Ball & Socket	Ball & Socket
Security clip type	R	R	R	R	R
No. of sub-conductor	2	2	2	2	2
Sub-conductor spacing (mm)	450	450	450	450	450
Live line working	Required	Required	Required	Not required	Required
Sag adjuster type	-	-	Quadrant	Turnbuckle	Turnbuckle
Linear range (mm)	-	-	300	230	230
Increment (mm)	-	-	6	-	-
Overall set length (mm)	4800	4800	5150	5150	5150
Min. failing load of complete set:					
Common to all conductors (kN)	160	2x160	2x210	210	210
Common to any two nos. conductors (kN)	-	-	-	-	-
Insulator protective devices: Type					
Live end	Raquet	Raquet	Raquet	Raquet	Raquet
Earth end	Single Point	Single Point	Single Point	Single Point	Single Point

Annex 10-1(4): Insulator Sets - Types & Uses - 400 kV (River Crossing Portion) - Quad Finch – Not Applicable

Insulator Set Type	Suspension	Tension
Reference drawing		
Set configuration	Triple	Triple
No. of insulator strings	3	3
Min. separation between centres of parallel strings (mm)	450	450
Coupling type	Ball & Socket	Ball & Socket
Security clip type	R	R
No. of sub-conductor	4	4
Sub-conductor spacing (mm)	450	450
Live line working	Required	Required
Sag adjuster type	-	Quadrant
Linear range (mm)	-	300
Increment (mm)	-	6
Overall set length (mm)	4700	5200-5500
Min. failing load of complete set:		
Common to all conductors (kN)	3x300	3x400
Common to individual conductor (kN)	-	400
Insulator protective devices: Type		
Live end	Raquet	Raquet
Earth end	Single Point	Single Point

Annex 10-1(5): Insulator Sets - Types & Uses - 400 kV (River Crossing Portion) - Twin Finch– Not Applicable

Insulator Set Type	Suspension	Tension
Reference drawing		
Set configuration	Twin	Twin
No. of insulator strings	2	2
Min. separation between centres of parallel strings (mm)	450	450
Coupling type	Ball & Socket	Ball & Socket
Security clip type	R	R
No. of sub-conductor	2	2
Sub-conductor spacing (mm)	450	450
Live line working	Required	Required
Sag adjuster type	-	Quadrant
Linear range (mm)	-	300
Increment (mm)	-	6
Overall set length (mm)	4700	5200-5500
Min. failing load of complete set:		
Common to all conductors (kN)	2x300	2x400
Common to individual conductor (kN)	-	400
Insulator protective devices: Type		
Live end	Raquet	Raquet
Earth end	Single Point	Single Point

Annex 10-1(6): Insulator Sets - Types & Uses - 230kV (Overland Portion)

Insulator Set Type	Suspension	Heavy Suspension	Tension	Low Duty	Pilot Suspension
Reference drawing					
Set configuration	Single	Single	Twin	Single	Single
No. of insulator strings	1	1	2	1	1
Min. separation between centres of parallel strings (mm)	--	--	450	--	--
Coupling type	Ball & Socket	Ball & Socket	Ball & Socket	Ball & Socket	Ball & Socket
Security clip type	R	R	R	R	R
No. of sub-conductor	2	2	2	2	2
Sub-conductor spacing (mm)	450	450	450	450	450
Live line working	Required	Required	Required	Not required	Required
Sag adjuster type	-	-	Quadrant	Turnbuckle	-
Linear range (mm)	-	-	300	230	-
Increment (mm)	-	-	6	-	-
Overall set length (mm)	3100	3100	3600-3900	3500 (A) 4100-4330 (B)	3100
Min. failing load of complete set:					
Common to all conductors (kN)	120	210	2x210	120	120
Common to individual conductor (kN)	120	210	210	120	120
Insulator protective devices: Type					
Live end	Raquet	Raquet	Raquet	Raquet	Raquet
Earth end	Single Point	Single Point	Single Point	Single Point	Single Point

(A) Upright (B) Inverted

Annex 10-1(7): Insulator Sets - Types & Uses - 230kV (River Crossing Portion) – Not Applicable

Insulator Set Type	Suspension	Tension
Reference drawing		
Set configuration	Twin	Twin
No. of insulator strings	2	2
Min. separation between centres of parallel strings (mm)	450	450
Coupling type	Ball & Socket	Ball & Socket
Security clip type	R	R
No. of sub-conductor	2	2
Sub-conductor spacing (mm)	450	450
Live line working	Required	Required
Sag adjuster type	-	Quadrant
Linear range (mm)	-	300
Increment (mm)	-	6
Overall set length (mm)	3100	3600-3900
Min. failing load of complete set:		
Common to all conductors (kN)	2x210	2x300
Common to individual conductor (kN)	-	-
Insulator protective devices: Type		
Live end	Raquet	Raquet
Earth end	Single Point	Single Point

Annex 10-1(8): Insulator Fittings - Types & Uses - 132kV (ACSR Grosbeak or equiv. dia. ACCC)

Insulator Fittings Type	Suspension	Heavy Suspension	Tension	Low Duty	Pilot Suspension
Reference drawing					
Set configuration	Single	Single	Single	Single	Single
No. of insulator strings	1	1	1	1	1
Min. separation between centres of parallel strings (mm)	-	-	-	-	-
Coupling type	Ball & Socket	Ball & Socket	Ball & Socket	Ball & Socket	Ball & Socket
Security clip type	R	R	R	R	R
No. of sub-conductor	1	1	1	1	1
Sub-conductor spacing (mm)			-	-	-
Live line working	Required	Required	Required	Not Required	Required
Sag adjuster type	-	-	Quadrant	Turnbuckle	-
Linear range (mm)	-	-	75 - 225	230	-
Increment (mm)	-	-	-	-	-
Overall set length (mm)	2000	2000	2400	2350 (A) 2900 (B)	1950
Min. failing load complete set					
Common to all conductor (kN)	70	120	120	70	70
Common to individual Conductor (kN)	70	120	120	70	70
Insulator protective devices: Type					
Live end	Single Point	Single Point	Single Point	Single Point	Single Point
Earth end	Single Point	Single Point	Single Point	Single Point	Single Point

(A) Upright (B) Inverted

Annex 10-1(9): Insulator Fittings - Types & Uses - 132kV (ACSR Finch) – Not Applicable

Insulator Fittings Type	Suspension	Heavy Suspension	Tension	Low Duty	Pilot Suspension
Reference drawing					
Set configuration	Single	Single	Single	Single	Single
No. of insulator strings	1	1	1	1	1
Min. separation between centres of parallel strings (mm)	-	-	-	-	-
Coupling type	Ball & Socket	Ball & Socket	Ball & Socket	Ball & Socket	Ball & Socket
Security clip type	R	R	R	R	R
No. of sub-conductor	1	1	1	1	1
Sub-conductor spacing (mm)			-	-	-
Live line working	Required	Required	Required	Not Required	Required
Sag adjuster type	-	-	Quadrant	Turnbuckle	-
Linear range (mm)	-	-	75 - 225	230	-
Increment (mm)	-	-	-	-	-
Overall set length (mm)	2000	2000	2400	2350 (A) 2900 (B)	1950
Min. failing load complete set					
Common to all conductor (kN)	120	210	210	120	120
Common to individual Conductor (kN)	120	210	210	120	120
Insulator protective devices: Type					
Live end	Single Point	Single Point	Single Point	Single Point	Single Point
Earth end	Single Point	Single Point	Single Point	Single Point	Single Point

(A) Upright (B) Inverted

Annex 10-2: Earthwire/OPGW Sets - Types & Uses

Annex 10-2(1): 400kV – Overland Portion – Not applicable

Earthwire/OPGW Set Type	Suspension	Tension
Reference drawing		
Overall set length (mm)	350	700
Min. failing load complete set (kN)*	160	210

* - Strength may be modified upon submission of satisfactory technical clarification during execution.

Annex 10-2(2): 400kV– River Crossing Portion– Not Applicable

Earthwire/OPGWSetType	Suspension	Tension
Reference drawing		
Overall set length (mm)	350	700
Min. failing load complete set (kN)*	160	210

* - Strength may be modified upon submission of satisfactory technical clarification during execution.

Annex 10-2(3): 230kV (Overland Portion)

Earthwire/OPGW Set Type	Suspension	Tension
Reference drawing		
Overall set length (mm)	350	700
Min. failing load complete set (kN)*	70	120

* - Strength may be modified

Annex 10-2(4): 230kV (River Crossing Portion) – Not Applicable

Earthwire/OPGW Set Type	Suspension	Tension
Reference drawing		
Overall set length (mm)	350	700
Min. failing load complete set (kN)*	120	210

* - Strength may be modified

Annex 10-2(5): 132kV (Overland Portion)

Earthwire/OPGW Set Type	Suspension	Tension
Reference drawing		
Overall set length (mm)	350	700
Min failing load complete set (kN)*	70	120

* - Strength may be modified

Annex 10-2(6): 132kV (River Crossing Portion) – Not applicable

Earthwire/OPGW Set Type	Suspension	Tension
Reference Drawing		
Overall set length (mm)	350	700
Min. Failing Load Complete set (kN)	160	210

Annex 10-3: Conductor Joints & Clamps - Types & Uses

Annex 10-3(1): 400kV – Overland Portion – Not applicable

Joint & Clamp Type	Conductor			Earthwire	
	ACSR Finch equiv. dia ACCC	ACSR Finch/ACSR Finch Equiv LL Conductor	ACSR Chuker	ACSR Dorking equiv. OPGW	ACSR Dorking Earthwire
Suspension clamp type	Trunnion Corona Free	Trunnion Corona Free	Trunnion Corona Free	Armour grip	Trunion
Armour rods	Preformed type required for all suspension sets	Preformed type required for all suspension sets	Preformed type required for all suspension sets	Not required	Not required
Counterweights (kg)	40-80-120	40-80-120	40-80-120		
Tension joints:					
Dead end type	Compression	Compression	Compression	Helical	Compression
Jumper terminal type	Compression	Compression	Compression		
Mid-spans type	Compression	Compression	Compression		Compression
Repair sleeves type	Compression/ Helical	Compression/ Helical	Compression/ Helical	Compression/ Helical	Compression/ Helical
Tee connectors type	Compression	Compression	Compression		Compression
Non-tensile joints:					
Disconnectable					
Non-disconnectable					
Jumper palms type	Bolted 0° & 30°	Bolted 0° & 30°	Bolted 0° & 30°		
Line termination fittings type	Weighted spacers	Weighted spacers	Weighted spacers		
Jumper weights (kg)	3 x 35	3 x 35	3 x 35		
Tubular jumpers					
Earthwire bonds - end fitting type				Pin-lug Lug-lug	Lug-lug

Annex 10-3(2): 400kV – River Crossing Portion– Not applicable

Joint & Clamp Type	Conductor	Earthwire	
	ACSR Finch equiv. dia ACCC	ACSR Dorking equiv. OPGW	ACSR Dorking Earthwire
Suspension clamp type	Trunnion Corona Free	Armour grip	Trunion
Armour rods	Preformed type required for all suspension sets	Not required	Not required
Counterweights (kg)	40-80-120		
Tension joints:			
Dead end type	Compression	Helical	Compression
Jumper terminal type	Compression		
Mid-spans type	Compression		Compression
Repair sleeves type	Compression/Helical	Compression/Helical	Compression/Helical
Tee connectors type	Compression		Compression
Non-tensile joints:			
Disconnectable			
Non-disconnectable			
Jumper palms type	Bolted 0° & 30°		
Line termination fittings type	Weighted spacers		
Jumper weights (kg)	3 x 35		
Tubular jumpers			
Earthwire bonds - end fitting type		Pin-lug Lug-lug	Lug-lug

Annex 10-3(3): 230kV (Overland Portion)

Joint & Clamp Type	Conductor	Earthwire	
	ACSR Mallard or equiv. dia ACCC	7 x 4.0 S equiv. OPGW	7 x 4.0 GS Earthwire
Suspension clamp type	Trunnion Corona Free AGS	Armour grip	Trunion
Armour rods	Preformed type	Not required	Not required
Counterweights (kg)	40-80-120		
Tension joints:			
Dead end type	Compression	Helical	Compression
Jumper terminal type	Compression		
Mid-spans type	Compression		Compression
Repair sleeves type	Compression/Helical	Compression/Helical	Compression/Helical
Tee connectors type	Compression		Compression
Non-tensile joints:			
Disconnectable			
Non-disconnectable			
Jumper palms type	Bolted 0° & 30°		
Line termination fittings type	Weighted spacers		
Jumper weights (kg)	3 x 35		
Tubular jumpers			
Earthwire bonds - end fitting type		Pin-lug Lug-lug	Lug-lug

Annex 10-3(4): 230kV (River Crossing Portion) – Not Applicable

Joint & Clamp Type	Conductor	Earthwire	
	795MCM ACSR Mallard equal dia. ACCC	7 x 4.0 S equiv. OPGW	7 x 4.0 GS Earthwire
Suspension clamp type	Trunnion Corona Free	Armour grip	Trunion
Armour rods	Preformed type	Not required	Not required
Counterweights (kg)	40-80-120		
Tension joints:			
Dead end type	Compression	Helical	Compression
Jumper terminal type	Compression		
Mid-spans type	Compression		Compression
Repair sleeves type	Compression/Helical	Compression/Helical	Compression/Helical
Tee connectors type	Compression		Compression
Non-tensile joints:			
Disconnectable			
Non-disconnectable			
Jumper palms type	Bolted 0° & 30°		
Line termination fittings type	Weighted spacers		
Jumper weights (kg)	3 x 35		
Tubular jumpers			
Earthwire bonds - end fitting type		Pin-lug Lug-lug	Lug-lug

Annex 10-3(5): 132kV (Overland Portion)

Joint & Clamp Type	Phase	OPGW	Earthwire
Conductor	ACSR Grosbeak or equiv. dia ACCC	7 x 3.25 S equiv.	7 x 3.25 GS Earthwire.
Suspension clamp type	Trunnion Corona free	Armour Grip	Trunion
Armour rods	Preformed type-required for heavy suspension set; not required for other sets	Required	Not Required
Counterweights (kg)	50		
Tension joints:			
Dead end type	Compression	Helical	Compression
Jumper terminal type	Compression		
Mid-spans type	Compression		Compression
Repair sleeves type	Compression		Compression/Helical
Tee connectors type	Compression		Compression
Non-tensile joints:			
Disconnectable			
Non-disconnectable			
Jumper palms type	Bolted 0° & 30°		
Line termination fittings type			
Jumper weights (kg)			
Tubular jumpers			
Earthwire bonds end fitting type		Lug-lug	Lug-lug

Annex 10-3(6): 132kV (River Crossing Portion) – Not applicable

Joint & Clamp Type	Conductor	Earthwire	
	ACSR Mallard	7 x 4.25S Grade 1150	OPGW
Suspension Clamp-type	-	Trunnion	Armour grip
Armour Rods	Required	Required	Required
Counterweights (kgs)	-	-	-
Tension Joints : Dead end-type Jumper terminal-type Midspans-type Repair Sleeves – type	 Compression Bolted Compression Helical	 Compression - Compression Compression/Helical	 Helical - - -
Non-Tensile Joints :			

Jumper palms –type	Bolted 0° & 30°	-	-
Earthwire bonds – end fitting type	-	Lug-lug	Pin-lug Lug-lug

Annex 10-4: Engineering Documents to be Submitted by Contractor

Clause Reference	Document Description	Comment
10.4.1	Insulator &conductor fittings - contract drawings	
10.4.3	Installation procedures	
10.6.1	Insulator &conductor fittings - type test certificate	If requested
10.6.1	Type test - programme & procedures	
10.6.2.12	Galvanizing test results	If requested
10.6.5	Ingot zinc certificates	If requested
10.6.5	Metallic & bolt/nuts material test certificate	If requested
10.6.5	Insulator &conductor fittings - type test results	
10.6.5	Insulator &conductor fittings - sample test results	
10.6.5	Insulator &conductor fittings - routine test results	If requested
10.6.6	Certificates of conformity	

Annex 10-5: Notification and Hold Points

Clause Reference	Notification Points	Hold Points
10.4.1		Contract drawings
10.6.1		Insulator and conductor fittings - type tests
10.6.3	Insulator &conductor fittings - sample tests	

Annex 10-6: Reference Standards

The reference standards and other documents referred to in this section of the specifications are listed below:

IEC 60120:	Dimensions of ball and socket couplings of string insulator units
IEC 60372:	Locking devices for ball and socket couplings of string insulator units Dimensions and tests
IEC 60471:	Dimensions of clevis and tongue couplings of string insulator units
IEC 61284:	Overhead lines Requirements and tests for fittings
BS EN 13411	Specification for thimbles for wire rope
BS EN ISO 1461	Specification for hot-dipped galvanising coating on iron and steel articles
BS 970:	Specification for wrought steel for mechanical and applied engineering purposes
BS EN 10084; BS EN 10085; BS EN 10087; BS EN 10095; BS EN 10250; PD 970; BS 1387:	Specification for screwed and socketed steel tubes and tubular and for plain end steel tubes suitable for welding or screwing to BS 21 pipe threads
BS EN 515:	Specification for wrought aluminium and aluminium alloy
BS EN 573; BS EN 586; BS EN 603; BS EN 604; BS EN 1559:	Specification for aluminium and aluminium alloy ingots and castings for general engineering purposes
BS EN 1676; BS EN 1706; BS 1574:	Specification for split cotter pins
BS EN 1563:	Specification for spheroidal graphite cast iron
BS EN 1172:	Specification for rolled copper and copper alloys: Sheet strip and foil
BS EN 1652; BS EN 1653; BS EN 1654; BS EN 50183	Aluminium alloy stranded conductors for overhead power lines
BS 3643:	ISO Metric threads
Part 2:	Limits and tolerances for course pitch series threads
BS 3692:	Specification for ISO Metric Precision hexagon bolts, screws and nuts
BS 4190:	Specification for ISO Metric hexagon bolts, screws and nuts
BS 4320:	Specification for metal washers for general engineering purposes. Metric series
BS 4429:	Specification for rigging screws and turnbuckles for general engineering, lifting purposes and pipe hanger applications
BS 4464:	Specification for Spring Washers for general engineering and automobile purposes. Metric series.

BS 4579:	Part 3 Performance of Mechanical and Compression Joints in Electric Cables and Wire Connectors
BS EN 1011:	Specification for arc welding of carbon and carbon manganese steel
BS EN 1562:	Specification for Malleable cast iron
BS EN 1676:	Aluminium and aluminium alloys - Alloyed ingots for remelting.
BS EN 1179:	Zinc and Zinc Alloys.
BS EN 10025:	Specification for hot rolled products of non-alloy structural steels and their technical delivery requirements.
BS EN 50341-1: 2012	Overhead electric lines exceeding AC 1 kV - Part 1: General requirements - Common specifications

11. Conductors

11.1 Scope

11.1.1 Types and Uses

The type and configuration of the phase conductor and earthwire shall be in accordance with the requirement of this specification. For types of conductor reference should be made to **Annex 11-1**.

11.1.2 Definition

The following definitions are used throughout this specification:

ACCC	Aluminium Conductor Composite Core
AAC	All Aluminium Conductor
AAAC	All Aluminium Alloy Conductors
ACSR	Aluminium Conductor Steel Reinforced
ACAR	Aluminium Conductor Alloy Reinforced
AACSR	Aluminium Alloy Conductor Steel Reinforced
ACSR/AW	Aluminium Conductor Aluminium clad steel reinforced
S	Galvanised Steel Conductor
SA	Aluminium clad steel conductor

11.1.3 Sub-conductor Configuration

For details of sub-conductor configuration and spacing reference should be made to **Annex 11-2.**

11.1.4 Optical Fibre Cable

For details of embedded optical fibre cable reference should be made to Section 14 of this specification.

11.1.5 Special Warranty for ACCC Conductor

The Contractor shall submit warranty certificate for ACCC conductor to the Employer within 30 days of the date of sale of the ACCC Conductor. The warranty shall valid for three years and shall start from the date mentioned in Conditions of Contract, Volume 1 of the bidding document. Scope of warranty shall be as below:

The ACCC® Conductor O.E.M. Warranty covers ACCC® Conductor and Connector failure due to:

1. Sag, Thermal Elongation & Creep: This Plan will repair or replace any covered Line that Creeps or Sags more than 5% of its measured and documented installation sag.

2. Wind generated Aeolian Vibration and Galloping: This Plan covers the failure of the covered Line and Connectors, resulting from wind generated Aeolian vibration and galloping.

3. ACCC® Composite Core Failure: This Plan covers ACCC® Conductor against failure of the composite core if it fails while operating within the manufacturers recommended operating range, plus 15%. Operating the covered line in excess of these permissible tolerances will void this warranty.

4. Breakage: This Plan covers line breakage (a) occurring while operating the line within the manufacturer's recommended operating range, plus 15%, and (b) not caused by any excluded causes set forth in the Conditions and Exclusions Section.

5. Corrosion & Rust: This Plan covers the Line failure resulting from corrosion caused by electrolysis, or rust.

6. Unwinding: This Plan covers Line failure resulting from the unwinding of the Line, except for unwinding caused by an excluded item or cause set forth in the Terms & Conditions Form.

11.2 Design

11.2.1 General

All AAC, AAAC, ACSR, AACAR and AACSR conductors shall comply with the requirements of IEC 61089. Where applicable the selection of parameters not quantified nor specified in IEC 61089, reference shall be made to the appropriate standard Specification stated in **Annex 11-1**.

The design of non-standard conductors including thermal resistant, fibre optic earthwire and those incorporating shaped wire sections shall be submitted to the Employer. **This is a Hold Point.**

11.2.2 System Loading Conditions

Reference should be made to **Annex 11-3** for details of the applicable phase conductor and earthwire system loading.

11.3 Materials

11.3.1 Conductors

11.3.1.1. The materials used for construction of ACCC conductor shall be such that the conductor meets the specified technical and performance requirements.

The ACCC conductor shall utilize a light weight, high strength glass and carbon fiber core embedded in a high performance thermoset resin matrix, produced using an advanced pultrusion process. Number of core shall be one. The materials shall be of such proven quality that its properties are not adversely influenced by the normal operating conditions of transmission line in tropical environment conditions.

The hybrid structural core shall be surrounded by helically wound, trapezoidal shaped, high efficiency fully annealed aluminium wires.

11.3.1.2. Aluminium wire used for AAC, ACSR, ACAR, and ACSR/AW or incorporated in fibre optic earthwire shall comply with the requirements of IEC 60889. The aluminium shall be of the highest purity commercially obtainable, the copper content shall not exceed 0.04%.

11.3.1.3. Aluminium alloy wire used for AAAC, AACSR or incorporated in fibre optic earthwire shall comply with the requirements of IEC 60104. The copper content shall not exceed 0.05%. Galvanised steel core wire used for ACSR and AACSR shall comply with the requirements of IEC 60888. Aluminium clad steel wire for ACSR/AW, SA or incorporated in fibre optic earthwire shall comply with the requirements of IEC 61232.

11.3.1.4. Shaped aluminium or aluminium alloy wire sections shall conform to the requirements of the appropriate IEC standard. Galvanised steel earthwire shall comply with the requirements of IEC 60888.

11.3.2 Conductor Grease

All grease applied to the specified inner aluminium, aluminium alloy or steel strands of the conductor shall be of a neutral type and shall have the following properties:

a. The grease shall protect the conductors from corrosion in service which may include operation in atmospheres containing salt spray or industrial pollution;
b. The grease shall not corrode steel, aluminium or aluminium alloy wires or any combination of wires;
c. The grease shall be compatible with any wire drawing lubricant present on the conductor wires.
d. The grease or any component of the grease shall not flow within, nor exude from the conductor during storage, transport, erection or during service at temperatures up to 100°C;
e. The grease shall retain its properties at all operating temperatures specified in **Annex 11-1;**
f. The grease shall not be damaged by storage or by the conductor manufacturing process (hot applied grease shall be unimpaired after heating to 20° C above its dropping point for 150 hours, or 10°C above the temperature reached during the application of the grease to the conductor, whichever is greater);
g. The grease shall have adequate resistance to oxidation;
h. The grease shall not present a health hazard and shall conform to relevant current health and safety requirements.

11.4 Workmanship

11.4.1 All the conductor strands shall be smooth, uniform and free from all imperfections, such as spills and splits, cracks, die marks, scratches, abrasions, rust etc.

11.4.2 The finished conductor shall be smooth, compact, uniform and free from all imperfections including kinks (protrusion of wires), wire cross over, over riding, looseness (wire being dislocated by finger/hand pressure and/or unusual bangle noise on tapping), material inclusions, white rust, powder formation or black spot (on account of reaction with trapped rain water etc.), dirt, grit etc.

11.4.3 Precautions shall be taken during the manufacture, storage and delivery of conductors to prevent contamination by copper or other materials which may adversely affect the aluminium or aluminium alloy.

11.4.4 Where permitted in IEC 61089 for aluminium or aluminium alloy wires, the preferred method of jointing single wires is cold pressure welding.

11.5 Protective Treatment

11.5.1 Necessary protective treatment for ACCC conductor shall be taken on Aluminium strands, composite core and stranded conductor as per relevant IEC, ASTM and BS EN standards.

11.5.2 All steel core wires of the conductors having steel core, unless specified to the contrary, shall be hot-dipped galvanised to comply with the requirements of IEC 60888.

11.5.3 Aluminium clad steel, if used, shall comply with the requirements of IEC 61232.

11.5.4 Unless specified to the contrary conductors having steel core shall be uniformly covered with a neutral grease (i.e. as case 2 appendix C IEC 61089). The minimum fill factor of the grease shall not be less than 70%. Each layer of wire except the outer layer shall have, both lengthwise and peripherally, an even and continuous coating of grease. Wax thickened greases shall be applied at a temperature above the dropping point, and shall be substantially free from contaminants. No grease must be visible on the exterior of the conductor and every effort should be made to minimize the presence of drawing oil on the surface of the finished conductor.

11.6 Conductor Erection

11.6.1 Method Statement

The Contractor shall provide the Engineer with a method statement giving sequential details of the conductor stringing, sagging, jointing, clamping-in etc. methods and including his intended program. Full tension stringing shall be undertaken, unless otherwise agreed in writing by the Engineer.

The method statement shall be submitted to the Employer for acceptance the requisite period before conductor stringing commences. **This is a Hold Point.**

11.6.2 Conductor Lengths and Joints

The fullest possible use shall be made of the maximum conductor lengths in order to reduce to a minimum the number of mid-span joints. The number, span and location of any phase conductor or earthwire mid-span joints used on the line shall be approved by the Employer. There shall not be more than one such joint per conductor in any one span. A conductor schedule detailing the lengths of conductors and positions of mid-span joints in the section, shall be submitted to the Employer for approval; this requisite period before conductor stringing commences. **This is a Hold Point.**

Mid-span joints shall not be used:

a. Within 3m of the conductor suspension clamp or tension joint (dead end).
b. In sections between tension towers of less than three spans unless specifically approved.
c. In spans over railways, navigable rivers, main roads, trunk routes, buildings or spans covered by special wayleave conditions. A line shall be deemed to be over a building when, at the specified maximum conductor temperature with an assumed conductor swing of 45 degrees from the vertical, any part of the building is vertically below any conductor.
d. In any span immediately adjacent to a span as described in (c), unless the tower between such span and adjacent spans is fitted with tension insulator sets.

Joints in Wires

Aluminium Wires

During stranding, no Aluminium wire welds shall be made for the purpose of achieving the required conductor length.

No joints shall be permitted in the individual wires in the outer most layer of the finished conductor. However joints are permitted in the inner layer(s) of the conductor unavoidably broken during stranding provided such breaks are not associated with either inherently defective wire or with the use of short lengths of Aluminium/ Alloy wires. Such joints shall not be more than four (4) per conductor length and shall not be closer than 15 meters from joint in the same wire or in any other Aluminium/Alloy wire of the completed conductor. A record of such joints for each individual length of the conductor shall be maintained by The Contractor for Employer's review.

Joints shall be made by cold pressure butt welding and shall withstand a stress of not less than the breaking strength of individual strand guaranteed.

11.6.3 Repair Sleeves

In the case of local damage to individual wires of a conductor during erection, repair sleeves may be permitted with the approval of the Employer and subject to no repair sleeve being nearer than 1.2 m from any conductor fitting other than spacer dampers. **This is a Hold Point.**

11.6.4 Line Terminations

Line termination fittings either bimetallic or aluminium shall be fitted as specified at line terminations, to provide the connection interface between the downleads and/or downdroppers and the substation equipment and/or cable sealing ends.

11.6.5 Inelastic Extensions of Conductors

The Contractor shall be responsible for evaluating the inelastic extension which is likely to occur in the conductor over the defined period of years. Reference shall be made to the recommendations contained in CIGRE Electra No. 75 for the evaluation. Compensation for the inelastic extensions so determined shall be made by the selection and use of an optimum pretension and time period and over tensioning the conductor at the time of erection. Over tensioning of the conductor shall be made by an allowance in the erection temperature i.e. sagging temperature equals conductor

temperature minus equivalent temperature correction. However, it should be noted that the maximum conductor tension under the defined system loading must not be exceeded at the time the transmission line is handed over.

The Contractor shall ensure that the erection tensions do not exceed the appropriate system loading on the supports. The Contractor's proposals shall be submitted to the Employer in conjunction with the erection sags and tensions.

11.6.6 Sags and Tensions

11.6.6.1 The Contractor shall prepare sag and tension calculations and schedules for the phase conductor and earthwire for every span at the proposed range of sagging operations, the design loading condition and at the maximum conductor operating temperature.

11.6.6.2 Due allowance shall be made for any severe gradient in the transmission line route, in addition the suspension insulator sets shall be vertical at the specified temperature immediately after stringing.

11.6.6.3 These schedules shall be submitted to the Employer the requisite period prior to the commencement of conductor stringing and for inclusion within the supply and install manual. **This is a Hold Point.**

11.6.7 Conductor Stringing

11.6.7.1. The Contractor shall take special care that during the stringing of the phase conductor and earthwire to ensure that no contact is made with the ground or any obstacles such as walls, fences, or buildings etc., nor shall they be over-strained during this process.

11.6.7.2. Drum battens shall not be removed until conductor drums are properly mounted at the drum station on the line and the battens shall be immediately refitted to the drums if any surplus conductor is left thereon. Drums will be transported and positioned on station with the least possible amount of rolling.

11.6.7.3. Approved means shall be provided to prevent any damage to conductors where they are run over temporary supports.

11.6.7.4. The conductors, joints and clamps shall be erected in such a manner that no bird caging, over- tensioning of individual wires or layers, or other deformation, or damage to the conductors shall occur.

11.6.7.5. Clamps or hauling devices shall, under erection conditions, allow no relative movement of strands or layers of the conductor. If required by the Employer, this property shall be demonstrated by actual tests.

11.6.7.6. The Contractor shall at his own expense make suitable arrangements for temporary guying of supports where necessary. Suitable plates (detachable or otherwise) shall be provided on the supports for the attachment of any temporary guys. The additional loads imposed on specific support during conductor stringing by the use of temporary guys shall be calculated and submitted to the Employer for appraisal prior to conductor stringing commencing. **This is a Hold Point.**

11.6.7.7. Each conductor shall be clamped in at suspension points and the adjacent spans fitted with spacer dampers or vibration dampers at a concurrent operation, after having been sagged and tensioned off at section supports. The maximum time period between clamping-in and fitting of spacer dampers or vibration dampers shall not exceed 36 hours, or such other time agreed with the Engineer.

11.6.7.8. If this period is exceeded the Employer reserves the right to undertake a random inspection of the unclamped and lowered conductor and if necessary the cutting out and replacement of any suspect conductor. All expenses involved in the unclamping, conductor lowering, conductor replacement and re-sagging of the conductor shall be borne by the Contractor, whether or not any damage is found.

11.6.8 Running Out Blocks

11.6.8.1 Conductor running out blocks shall be free running on ball or roller bearings and of an approved design to avoid damage to the conductor. The blocks shall have an electrical conducting path between their suspension fittings and the conductors supported by the blocks.

11.6.8.2 If conductors are being erected on one circuit of a double circuit line with the other circuit live or in other situations likely to induce a voltage into the conductor all running-out blocks shall be bonded to the support steelwork by means of flexible connections approved by the Employer.

11.6.8.3 The diameter of the running out block shall not be less than 20 times the diameter of the respective conductor. Alternatively, where a group of smaller blocks are used these shall be arranged such that the conductor passes over an equivalent radius of not less than 20 times the conductor diameter.

11.6.8.4 The hangers for the running out blocks should be of a uniform length so that the conductors and the sheaves are held at a uniform distance, not exceeding 500 mm above, or below their final position when clamped in.

11.6.9 Sagging

The Contractor shall use approved dynamometers, accurate sighting and/or other apparatus necessary for the proper checking of the work. Every section shall be offered to the Employer for inspection of the results before sagging equipment, dynamometers, sighting or other apparatus is removed from that portion of the Works. **This is a Notification Point.**

The assumed temperature of the conductor for the purposes of sagging, will be determined from an accurate thermometer basket suspended clear of the support steelwork at a point adjacent to the bottom crossarm level of one support at one end of the span being used to control sagging. The basket shall have been in position 15min before temperature reading is taken.

11.6.10 Earthing of Conductor During Erection (Safety)

During the erection of conductors and subsequently when any work is being carried out on the support above the anti-climbing device level, the Contractor shall ensure the conductors are adequately earthed at points not more than three spans apart, or such other spacing as may be necessary or directed by the Employer.

The earthing equipment shall be approved by the Employer and shall be designed to be clearly visible from the ground.

11.6.11 Crossings Over Roads, Railways, Buildings, Structures, etc.

Where the transmission line crosses over roads or tracks liable to be used by traffic of any description, or railways, buildings, structures and obstacles of any kind the Contractor shall provide temporary scaffolding during stringing operations. Scaffolding in accordance with this Clause and Clause 5.5.3 shall be of adequate construction and height. Drawings and supporting calculations shall be submitted to the Employer and governmental or statutory bodies. **This is a Hold Point.**

11.6.12 Live Line Scaffolds

Where it is possible only to have a restricted outage on a distribution or a transmission line sufficient only to erect the upper portion and 'net' the scaffold a live-line scaffold shall be used. Live line scaffolds shall be in accordance with the requirements of Clause 5.5.5. Drawings and supporting calculations shall be submitted to the Employer and governmental or other statutory bodies. **This is a Hold Point.**

11.6.13 Downleads

Downlead spans between terminal supports and substation anchor points shall be erected at reduced tensions in accordance with provision mentioned in Tower Section. Downleads shall be considered as slack span.

The Contractor shall include within his method statement details of his proposal for tensioning downleads.

11.6.14 Conductor Cutting

Conductor joints shall be made over protective sheeting and waste materials shall be removed from site. Cutting of layers of conductors shall be carried out with tools designed to prevent damage to underlying strands. Preparation prior to jointing shall be carried out in accordance with Clause 11.6.15.

11.6.15 Jointing

11.6.15.1. Before the conductor is inserted into compression type joints, clamps, connectors, compression spacers or repair sleeves, it shall be prepared in the following manner, using an approved grease for phase conductors and earthwires.

11.6.15.2. The Contractor shall include within his Method Statement full details of his proposed jointing procedures, including where necessary appropriate diagrams.

a. **New Conductor**: The outer layer of the conductor throughout the whole length of the joint shall be wiped clean, coated with grease, wire brushed (stainless steel) through the grease which shall be left on and assembled in the fitting after a further libreal application of grease.

b. **Old Conductor**: Where a compression joint is to be made on to old conductor the Employer shall be given the requisite period of notice. **This is a Notification Point.**

11.6.15.3. Unless otherwise agreed with the Employer who will take account of the degree of corrosion of the conductor, all the aluminium layers, after preliminary cleaning of the individual aluminium wires with a fine grade of abrasive paper or cloth, shall be coated with grease, wire brushed through the grease which shall be left on and assembled in the fitting after a further libreal application of grease. The innermost layer of aluminium wires should not be unlaid but treated on their external surfaces only. Care shall be taken to avoid damage to the wires especially by kinking or excessive removal of metal. If however, damage does occur the whole conductor shall be cut clear of the damage and as a fresh joint prepared.

11.6.15.4. All compression joints shall be fitted strictly in accordance with the manufacturer's instructions. During compression all dies shall fully close at each end of the bite and the bites shall overlap by a minimum of 5 mm. All flashes shall be removed.

11.6.16 Surface Greasing of Conductor

Except where specified to the contrary, the conductor shall be coated with an approved grease at the point of attachment of fittings immediately before the final assembly of any fittings and all surplus grease shall be removed after assembly.

11.6.17 Greasing of Bolted Interfaces

11.6.17.1. For bolted jumper connections, non-tension joints, tee connectors and bonding leads, the lug and clevis contact faces shall be greased with an approved grease, wire brushed through the grease libreally before assembly. All nuts and bolts shall be tightened to the supplier's recommended torque.

11.6.17.2. Where jumper or non-tension joint bolts are found to be loose the Contractor shall dismantle and re- assemble the joint as above before re-bolting and tightening.

11.6.17.3. All bolts shall face towards the centre line of each conductor bundle.

11.6.18 Inspection Holes

Where a tension joint is supplied with an inspection hole the aluminium alloy drive screw shall be hammered in firmly until smooth and flush with the surface of the aluminium sleeve using the flat face of a hammer. Final smoothing over may be carried out using a flat file if necessary.

11.6.19 Tension Support Jumpers

11.6.19.1. All tension support jumper loops shall be erected complete with all fittings in accordance with the approved wire clearance diagram.

11.6.19.2. Where quadruple bundle sub conductors are specified a reduced spacing twin spacer shall be fitted on the lowest pair of the jumper sub-conductors. They shall be adjusted on site to give the best possible clearance to prevent contact between the phase and jumper sub-conductors.

11.6.19.3. Where specified bonding spacers shall be located at a point suitable for the application of temporary earthing bonds, normally near the middle of the jumper. In the case of non-tension joint bonding spacers the conductors must butt in the centre. Jointing shall be in accordance with the requirements of Clause 11.6.15 and resistance measurement in accordance with Clause 11.7.14.

11.6.19.4. Where tubular jumpers are fitted, the earthing bar shall be arranged as near as practical to a step-bolt of the support.

11.6.20 Spacer Dampers

Spacer dampers where specified shall be fitted to the phase conductors strictly in accordance with the manufacturer's instructions.

Where there is a mid-span joint or repair sleeve on a conductor, the adjacent spacer damper must not be closer than 2m, or further away than 12m from the mid-span joint or repair sleeve. If possible, this should be achieved using the correct configuration of spacer damper positions. This configuration can be used in reverse by taking the measurement from the other support. Where the configuration given does not allow a spacer damper to be in the correct juxtaposition with the mid-span joint or repair sleeve an additional spacer damper should be fitted.

11.6.21 Vibration Dampers

Vibration dampers shall be fitted to the earthwires and where specified the phase conductors, strictly in accordance with the manufacturer's instructions.

11.6.22 Aircraft Warning Spheres

Where specified aircraft warning spheres shall be fitted to the earthwires, complete with factory formed helical armour rods. The spheres shall, be located in accordance with the requirements of ICAO Annex 14 unless specified to the contrary.

11.6.23 Earthwire Bonds

Flexible earthwire bonds in accordance with the requirements of clause 10.2.20 shall be fitted between all earthwire suspension and tension sets and the support. Where OPGW is used the connection to the earthwire shall if necessary be via a 'C' type connector (ref. clause 10.2.19).

No bond is required at terminal support positions where the earthwire jumper shall be attached directly to the support. At other tension positions the earthwire shall be continuously jumpered through. Where OPGW is used the jumper shall be formed from a short length of equivalent conductor attached to the earthwire via a 'C' type connector.

11.7 Quality Control

11.7.1 Conductors

11.7.1.1 Sample tests shall be undertaken on all conductors in accordance with the requirements of IEC 61089 as applicable and this specification. **This is a Notification Point.**

11.7.1.2 The mechanical tests shall be taken on straightened samples of individual wires taken after conductor stranding. In the event of the sample from any length not passing the mechanical or resistance tests, a second and third sample shall be taken from the same length, and if one of these also fails under test, the length of conductor (i.e. drum) from which it has been taken shall be rejected.

For the ductility tests, should any variation occur in the results between the torsion and elongation methods of testing the results of the torsion test shall prevail.

11.7.1.3 In the event of any machinery used for conductor manufacture being used for materials, other than aluminium, galvanized or aluminium clad steel, the manufacturers shall furnish the Employer with a certificate stating that the machinery has been thoroughly cleaned before use on aluminium, aluminium alloy, galvanized or aluminium clad steel wire and that the conductor is free from contamination.

11.7.2 Grease

11.7.2.1. The manufacturer's type test proposals for proving compliance with this specification with regard to the following grease properties shall be submitted to the Employer. **This is a Hold Point.**

a. dropping point tests;
b. thermal history test;
c. reversibility;
d. oxidation;
e. corrosive substances in grease;
f. anti-corrosion properties;
g. complete conductor test, to ensure that the grease does not appear through the outer wires at less than the specified temperature.

11.7.2.2. Sample tests on grease shall be undertaken at the same time as sample tests on the conductor. The mass and length of the conductor sample shall be measured and recorded. The sample shall be inspected to ascertain that no grease is visible on the exterior. The wires shall then be separated progressively layer by layer whilst being inspected to verify the coating requirements are met.

11.7.2.3. Grease for the dropping test shall be removed without heating, the remaining grease may then be removed by a convenient method. The mass of the cleaned conductor sample shall be determined and recorded. The mass of grease shall be determined from the difference in masses and shall be recorded.

11.7.2.4. The mass of grease per unit length of conductor shall not be less than the minimum value given in **Annex 11-1**.

11.7.2.5. All drums of conductor shall be routinely inspected for traces of visible grease on the exterior of the conductor.

11.7.3 Galvanizing

Tests for galvanized steel wire shall be carried out at the works to ensure compliance with the requirements of IEC 60888. Details of the test results shall be made available to the Employer upon request.

11.7.4 Aluminium Clad Steel

Tests for aluminium clad steel wire shall be carried out at the works to ensure compliance with the requirements of IEC 61232. Details of the test results shall be made available to the Employer upon request.

11.7.5 Type Tests

The following tests shall be conducted once on sample/samples of conductor from each manufacturing facility:

(a) ACCC Conductor-Not Applicable

(1)	**On complete Conductor**	
i)	DC resistance test on stranded conductor	: As per Annex 11.4
ii)	UTS test on stranded conductor	: As per Annex 11.4
iii)	Stress- Strain test on stranded conductor and core at room temperature	: IEC 61089
iv)	Sheaves Test	: As per Annex 11.4
v)	Axial Impact Test	: As per Annex 11.4
vi)	Radial Crush Test	: As per Annex 11.4
vii)	Torsional Ductility Test	: As per Annex 11.4
viii)	Aeolian Vibration Test	: As per Annex 11.4
(2)	**On Conductor Strand/core**	: As per Annex 11.4
i)		: As per Annex 11.4
ii)	Coefficient of linear expansion on composite core	: As per Annex 11.4
iii)	Bending test on composite core	: As per ASTM B987
iv)	Brittle Fracture Test	: As per Annex 11.4
Type tests specified shall require to be submitted in the bid for the ACCC Conductor. Report shall be considered valid if the tests conducted within the past 5 years as on the date of bid opening at an accredited ISO/IEC 17025 third party laboratory or at manufacturer's own laboratory witnessed by the representative(s) of a utility or witnessed by a representative of an ISO/IEC 17025 accredited laboratory. In the case of composite core conductors, the tests specified shall be carried out before stranding on as-manufactured samples.		
The ACCC conductor, to be used in the transmission line, must be type tested. If the bidder does not submit above satisfactory type test reports for the offered type ACCC conductor with their bid, then the type tests as per above requirements must be conducted during contract execution stage in presence of Employer Engineers within the Contract price.		

(a) ACSR Conductor

The following tests shall be conducted once on a sample of conductor for each type of conductor for manufacturing facility:

i)	DC resistance test on stranded conductor	: As per Annex 11.4a
ii)	UTS test on stranded conductor	: As per Annex 11.4a

11.7.6 Acceptance Tests

(a) ACCC Conductor -Not Applicable		
i)	Visual and dimensional check on drum	: As per Annex 11.4
ii)	Visual check for joints scratches etc. and length measurement of conductor by rewinding	: As per Annex 11.4
iii)	Dimensional check on core/core strands and Aluminium or Aluminium Alloy strands	: As per Annex 11.4
iv)	Check for lay-ratios of various layers	: As per Annex 11.4
v)	Breaking load test on core/core strands and aluminium/Aluminium alloy strands	: As per Annex 11.4
vi)	Minimum conductivity test on Aluminium/thermal resistant Aluminium Alloy strands	: As per IEC 60889
vii)	Procedure qualification test on welded joint of Aluminium/ Aluminium Alloy strands	: As per Annex 11.4
viii)	Heat resistant test on Aluminium Alloy strands	: As per Annex 11.4
ix)	Glass transition temperature test for composite core	: As per Annex 11.4
x)	Galvanic layer thickness test for composite core	: As per Annex 11.4
xi)	DC resistance test on aluminium/Aluminium alloy strands	: As per Annex 11.4
xii)	Bending test on composite core	: As per Annex 11.4
All the tests to be performed on composite core shall be carried out in as manufactured conditions before dispatch of composite core. Two engineers of POWER GRID will carry out the witnessing of these tests on 5% reels of each lot/shipment. Bidders are requested to refer to clause 18.1.11.1 in this regard. All costs of such tests and witness shall deem to be included in the contract price. All acceptance tests of Conductor as mentioned above to be carried out on 10 % of conductor drums.		

(b) ACSR Conductor/Galvanized Steel Earthwire		
i)	Visual and dimensional check on drum	: As per Annex 11.4a

ii)	Visual check for joints scratches etc. and length measurement of conductor by rewinding	: As per Annex 11.4a
iii)	Cross Sectional Area of Complete Conductor	: IEC 61089
iv)	Overall Diameter of Conductor	: IEC 61089
v)	Surface Condition of the Conductor	: IEC 61089
vi)	Check for lay-ratios of various layers	: As per Annex 11.4a
vii)	Mass Per Unit Length/Linear Density	: IEC 61089
viii)	Dimensional check on steel and aluminium/ Aluminium alloy strands	: As per Annex 11.4a
ix)	Breaking load test on steel and aluminium/Aluminium alloy strands	: As per Annex 11.4a
x)	Wrap test on steel and aluminium/Aluminium alloy strands	: IEC 60888 and IEC 60889
xi)	DC resistance test on aluminium/Aluminium alloy strands	: IEC 60889
xii)	Stress at 1% Extension Test of Steel wire/strands	: IEC 60888
xiii)	Galvanic layer thickness test for steel strands	: As per Annex 11.4a
xiv)	Torsion and Elongation tests on steel strands	: As per Annex 11.4a
xv)	Procedure qualification test on welded joint of Aluminium/ Aluminium Alloy strands	: As per Annex 11.4a
xvi)	Barrel batten strength test	: As per Annex 11.4a
xvii)	Mass of Grease	IEC 50182
xviii)	Drop point of grease	ASTM D 566/IEC 50182&IEC61089
xix)	Verification of conductor length	The Employer reserves the right to verity the length of conductor after unreeling at least Five percent (5%) to ten percent (10%) of the drums in a lot offered for inspection. The actual quantity will be discussed and mutually agreed to by the Supplier & Employer in the Quality Assurance
All acceptance tests of Conductor as mentioned above to be carried out on 10 % of conductor drums. Sampling plan for Mass of grease and drop point of grease shall be as per IEC 50182.		

(a) Aluminium Clad Steel Earthwire		
i)	Visual and dimensional check on drum	: As per Annex 11.4a
ii)	Visual check for joints scratches etc. and length measurement of conductor by rewinding	: As per Annex 11.4a
iii)	Cross Sectional Area of Complete Earthwire	: IEC 61089
iv)	Overall Diameter of Earthwire	: IEC 61089
v)	Surface Condition of the Earthwire	: IEC 61089
vi)	Check for lay-ratios of various layers	: As per Annex 11.4a
vii)	Mass Per Unit Length/Linear Density	: IEC 61089
viii)	Tensile Test on ACS Wire/strand	: IEC 61232
ix)	Elongation tests on ACS Wire/strand	: IEC 61232
x)	Torsion test on ACS Wire/strand	: IEC 61232
xii)	Thickness of aluminium on ACS Wire/strand	: IEC 61232
xiii)	Resistivity test on ACS Wire/strand	: IEC 61232
xiv)	Stress at 1 % extension on ACS Wire/strand	: IEC 61232
xv)	Mass of Grease	
xvi)	Drop point of grease	ASTM D 566
xvii)	Verification of conductor length	The Employer reserves the right to verity the length of conductor after unreeling at least Five percent (5%) to ten percent (10%) of the drums in a lot offered for inspection. The actual quantity will be discussed and mutually agreed to by the Supplier & Employer in the Quality Assurance
All acceptance tests of Conductor as mentioned above to be carried out on 10 % of conductor drums. Sampling plan for Mass of grease and drop point of grease shall be as per IEC 50182.		

11.7.7 Routine Test

a)	Check to ensure that the joints are as per Specification
b)	Check that there are no cuts, fins etc., on the strands.
c)	Check that drums are as per Specification
d)	All acceptance tests as mentioned above to be carried out on 10 % of drums

11.7.8 Tests During Manufacture

a)	Chemical analysis of Aluminium /Aluminium alloy used for making Aluminium Alloy / Aluminium strands	: As per Annex 11.4
b)	Chemical analysis of core strands/composite core	: As per Annex 11.4

Costs of all tests, as required, shall be deemed to be included in the contract price.

11.7.9 Test Certificate

All metallic materials used in the manufacture of conductors shall be covered by test certificates stating their mechanical and chemical properties to prove compliance with this specification and IEC as appropriate. These certificates shall be made available to the Employer upon request.

Test records covering type and sample tests shall be made available to the Employer.

11.7.10 Certificate of Conformity

Whenrequestedcopiesofthefollowingcertificate/recordsshallalsobeforwarded:

a. metallic material test certificate;
b. conductor stranding equipment non contamination certificate;
c. galvanizing test records;
d. ingot zinc certificate;
e. aluminium cladding test records.

11.7.11 Sagging Tolerance

Immediately after the conductors have been sagged and clamped in, the mean sag of the conductors forming any phase shall not differ from the calculated erection sag by more than 4% and the sub-conductors forming each phase conductor bundle shall not differ from each other by more than 40 mm. In addition the sag of any one phase shall not differ by more than 150 mm from the mean sag of all phases in the same span. The linear adjustment available on the sag adjusters, unless specified to the contrary, at the end of the maintenance period shall not be less than ±75 mm.

11.7.12 Manufacturing Tolerance

a) ACSR

Manufacturing tolerances on the dimensions to the extent of ± 0.5% percent shall be permitted for individual strands and the complete conductor.

b) ACCC

For Composite core as per ASTM B987, section 12 (Dimensions and Permissible Variation), the average diameter shall not differ by more than +/- 0.05 mm from the nominal diameter of the composite core.

For Conductor as per ASTM B857, section 13 (Variation in area and diameter) The area of cross section of the aluminum wires of a conductor shall be not less than 98 % nor more than 102 % of the area specified and The diameter of the finished conductor shall be not less than 99 % nor more than 101 % of the diameter specified.

11.7.13 Jointing Competence

Tension and non-tension compression joints, repair sleeves, tee connectors and bimetallic connectors shall be fitted to the conductors only by linesmen whom the Contractor possess written approval of their Jointing Competence issued by the Employer. Where necessary the Contractor shall arrange for the appropriate tests to be witnessed by the Employer allowing the requisite period of notice. **This is a Hold Point.**

11.7.14 Electrical Resistance of Joints and Clamps

The maximum resistance, measured overall (primary measurement), of all joints shall not exceed 75% of the resistance of an equivalent length of conductor.

11.7.15 Bolt Tightness

The Contractor shall be responsible for checking that the bolts in all fittings including spacers, spacer dampers, vibration dampers etc., have been correctly tightened to the Supplier's recommended torque value. A record of this work shall be kept and made available to the Engineer upon request.

11.7.16 Clearances

Clearance between phase conductors, including jumpers and ground and between jumpers and support structures shall be checked during erection and before handing over the line.

11.7.17 Final Inspection

Immediately prior to hand over of the transmission line, the Contractor shall conduct a final line route inspection to ensure that the specified clearances are available to all supports, ground etc. all temporary earthings have been removed and that extraneous objects are removed. **This is a Notification Point.**

Where specified after the final route inspection the Contractor shall demonstrate by means of a low voltage test, to the complete satisfaction of the Employer, that there is complete continuity over each phase. **This is a Hold Point.**

11.7.18 Records

During the course of the work, the SIMM document (reference Clause 4.7) shall be updated with details of the actual phase conductor and earthwire erection sags, location of phase conductor and earthwire tension joints including repair sleeves and the electrical resistance of all joints and clamps including the name of the linesman responsible and the date of assembly.

Annex 11-1: Conductor - Types and Uses

Annex11-1(1-1): 400kV – Overland Portion – ACCC Dhaka – Not applicable

Conductor	Phase	Earthwires	
Designation (Code Name)	ACCC 724/71 Dhaka (ACSR Finch equiv. diameter)	ACSR Dorking	OPGW
Type	ACCC	ACSR	-
Reference standards	ASTM/IEC/BSEN	ASTM/IEC/BSEN	IEC, ITU, IEEE
Aluminium/Aluminium alloy grade	1350 O	-	-
Steel grade	-	-	-
Galvanising Thickness	-	-	-
Aluminium class (AS wire)	-	-	-
Aluminium type (AS wire)	-	-	20SA
Conductor max. continuous operating temperature (°C)	180	-	-
Minimum mass of grease (kg/km)	-	12	-
Creep period of conductor to be considered (years)	-	-	-
No. and diameter of aluminium wire (No./mm)	Refer Note (ii)	12/3.2	7/4.0 GS
No. and diameter of steel wire (No./mm)	-	7/3.2	
Overall diameter of conductor (mm)	32.87	16.03	16.7
Overall sectional area of conductor (mm^2)	794.8	153.1	158
Rated tensile strength of conductor (kN)	192.2	83.18	101.41
Weight (kg/km)	2137	708	860
Direction of external lay	Right hand	Right hand	Right hand
Cross Sectional Area of Al (mm^2)	724	-	-
Cross Sectional Area of Composite Core (mm^2)	71	-	-
No. of Composite Core (mm)	1	-	-
Shape of wires	All trapezoidal	Round	Round
Diameter of Composite Core (mm)	9.53	-	-
Rated tensile strength of core (kN)	151.7	-	-
Current carrying capacity at 180 Deg C (amp)	2096 [Refer Note (iii)]	-	-
Max. allowable emergency operating temp.(Deg C)	200	-	-
Maximum DC Resistance at 20 Deg C (ohm/km)	0.0387	-	0.323

Note:
(i) The code name of this conductor shall be ACCC 724/71 Dhaka.
(ii) Number and diameter of the aluminium strands will depend on the conductor manufacturer. The manufacturer must show the aluminum cross-section meets the nominal cross-sectional area shown.
(iii) 40degC ambient, 0.61m/sec wind, 1033 W/sq.m sun
(iv) Absorptivity 0.9 and Emissivity 0.7

Annex11-1(1-2): 400kV – Overland Portion – ACSR Finch – Not applicable

Conductor	Phase	Earthwires	
Designation (Code Name)	ACSR Finch	ACSR Dorking	OPGW
Type	ACSR	ACSR	-
Reference standards	ASTM/IEC/BSEN	ASTM/IEC/BSEN	IEC, ITU, IEEE
Aluminium/Aluminium alloy grade		-	-
Steel grade	-	-	-
Galvanising Thickness	-	-	-
Aluminium class (AS wire)	-	-	-
Aluminium type (AS wire)	-	-	20SA
Conductor operating temperature range (°C)	5-80	-	-
Minimum mass of grease (kg/km)	41	12	-
Creep period of conductor to be considered (years)	20	-	-
No. and diameter of aluminium wire (No./mm)	54/3.647	12/3.2	-
No. and diameter of steel wire (No./mm)	19/2.189	7/3.2	-
Overall diameter of conductor (mm)	32.83	16.03	16.7
Overall sectional area of conductor (mm^2)	635.6	153.1	158
Rated tensile strength of conductor (kN)	173.8	83.18	101.41
Weight (kg/km)	2121	708	860
Direction of external lay	Right hand	Right hand	Right hand
Cross Sectional Area of Al (mm^2)	-	-	-
Shape of wires	-	Round	Round
Current carrying capacity at 80 Deg C (amp)	-	-	-
Max. allowable emergency operating temp.(Deg C)	-	-	-
Maximum DC Resistance at 20 Deg C (ohm/km)	0.0514	-	0.323

Only for Fittings of LL ACSR Finch Conductor– Not applicable

Annex11-1(1): 400kV – Overland Portion

Conductor	Phase	Earthwires	
Designation (Code Name)	LL-ACSR Equivalent to FINCH	ACSR Dorking	OPGW
Type	LL-ACSR	ACSR	-
Reference standards	ASTM/IEC/BSEN	ASTM/IEC/BSEN	IEC, ITU, IEEE
Steel core	Aluminium-clad extra high strength (1,770 MPa) steel wire or Zinc-coated extra high strength (1,960 MPa) steel wire	-	-
Aluminium/ Aluminium alloy grade	-	-	-
Steel grade	-	-	-
Galvanising Thickness	-	-	-
Aluminium class (SA wire)	-	-	-
Aluminium type (SA wire)	-	-	20SA
Conductor max. continuous operating temperature (°C)	80	-	-
Minimum mass of grease (kg/km)	-	12	-
Creep period of conductor to be considered (years)	20	-	-
No. and diameter of aluminium wire (No./mm)	Refer Note (ii)	12/3.2	7/4.0 GS
No. and diameter of steel wire (No./mm)	-	7/3.2	
Overall diameter of conductor (mm)	Equal or less than 32.83	16.03	16.7
Overall sectional area of conductor (mm^2)	Approx. 636.9	153.1	158
Rated tensile strength of conductor (kN)	Approx. 174.6	83.18	101.41
Weight (kg/km)	Approx. 2,131	708	860
Direction of external lay	Right hand	Right hand	Right hand
Shape of wires	All trapezoidal	Round	Round
Current carrying capacity at 80 Deg C (amp)	At least 837 [Refer Note (iii)]	-	-
Maximum DC Resistance at 20 Deg C (ohm/km)	Equal or less than 0.05144	-	0.323
Force coefficient (drag coefficient)	Less than 0.9 [Refer Note (v)]	-	-

Note:
(i) ACSR conductor shall be applied with grease in accordance with the requirement of Clause 11.4 of this Section for protection of steel from corrosion if the galvanised steel wire is used for core.
(ii) Number and diameter of the aluminium strands will depend on the conductor manufacturer. The manufacturer must show the aluminium cross-section meets the nominal cross-sectional area shown.

(iii) Ambient Temp.: 40degC, Wind Velocity: 0.5m/sec, Solar Radiation: 0.1w/cm^2, Absorptivity: 0.9
(iv) LL-ACSR equivalent to ACSR FINCH shall have, compared with those of FINCH, at least the same current capacity at 80°C operating temperature, the same or less DC resistance at 20°C and with the less sag at 80°C operating temperature and the less overall diameter of conductor to reduce the height of tower and tower loadings. Calculation sheets for current capacity and the sag-tension shall be submitted with the bid.
(v) LL-ACSR shall have a force coefficient (drag coefficient) of less than 0.9 as mentioned in the above table, which shall be confirmed by the type test report of a similar size of LL-ACSR. Type test report and/or certificate shall be submitted with the bid as evidence.

Annex11-1(1-3): 400kV – Overland Portion – ACSR Chuker – Not applicable

Conductor	Phase	Earthwires	
Designation (Code Name)	ACSR Chuker	ACSR Dorking	OPGW
Type	ACSR	ACSR	-
Reference standards	ASTM/IEC/BSEN	ASTM/IEC/BSEN	IEC, ITU, IEEE
Aluminium/Aluminium alloy grade		-	-
Steel grade	-	-	-
Galvanising Thickness	-	-	-
Aluminium class (AS wire)	-	-	-
Aluminium type (AS wire)	-	-	20SA
Conductor operating temperature range (°C)	5-80	-	-
Minimum mass of grease (kg/km)	-	12	-
Creep period of conductor to be considered (years)	20	-	-
No. and diameter of aluminium wire (No./mm)	84/3.70	12/3.2	-
No. and diameter of steel wire (No./mm)	19/2.22	7/3.2	-
Overall diameter of conductor (mm)	40.70	16.03	16.7
Overall sectional area of conductor (mm^2)	-	153.1	158
Rated tensile strength of conductor (kN)	227.8	83.18	101.41
Weight (kg/km)	3092	708	860
Direction of external lay	Right hand	Right hand	Right hand
Cross Sectional Area of Al (mm^2)	-	-	-
Shape of wires	-	Round	Round
Current carrying capacity at 80 Deg C (amp)	-	-	-
Max. allowable emergency operating temp.(Deg C)	-	-	-
Maximum DC Resistance at 20 Deg C (ohm/km)	0.0321	-	0.323

Annex 11-1(2): 400kV – River Crossing Portion– Not applicable

Conductor	Phase	Earthwires	
Designation (Code Name)	ACCC ULS 724/71 Dhaka (ACSR Finch equiv. diameter)	19x3.67	19x3.67 equiv. OPGW
Type	ACCC	20SA	-
Reference standards	ASTM/IEC/BSEN	IEC 61232	IEC, ITU, IEEE
Aluminium/Aluminium alloy grade	1350 O	-	-
Steel grade	-	-	-
Galvanising Thickness	-	-	-
Aluminium class (AS wire)	-	-	-
Aluminium type (AS wire)	-	-	20SA
Conductor max. continuous operating temperature (°C)	180	-	-
Minimum mass of grease (kg/km)	-	12	-
Creep period of conductor to be considered (years)	-	-	-
No. and diameter of aluminium wire (No./mm)	Refer Note (ii)	-	-
No. and diameter of steel wire (No./mm)	-	-	Not applicable
Overall diameter of conductor (mm)	32.87	18.35	-
Overall sectional area of conductor (mm^2)	794.8		158
Rated tensile strength of conductor (kN)	224		-
Weight (kg/km)	2132		-
Direction of external lay	Right hand	Right hand	Right hand
Cross Sectional Area of Al (mm^2)	724	-	-
Cross Sectional Area of Composite Core (mm^2)	71	-	-
No. of Composite Core (mm)	1	-	-
Shape of wires	All trapezoidal	Round	Round
Diameter of Composite Core (mm)	9.53	-	-
Rated tensile strength of core (kN)	184	-	-
Current carrying capacity at 180 Deg C	2096 [Refer Note (iii)]	-	-
Max. allowable emergency operating temp. (Deg C)	200	-	-
Maximum DC Resistance at 20 Deg C (ohm/km)	0.0387	-	0.4

Note:

(i) The code name of this conductor shall be ACCC ULS 724/71 Dhaka.

(ii) Number and diameter of the aluminium strands will depend on the conductor manufacturer. The manufacturer must show the aluminum cross-section meets the nominal cross-sectional area shown.

(iii) 40degC ambient, 0.61m/sec wind, 1033 W/sq.m sun

(iv) Absorptivity 0.9 and Emissivity 0.7

Annex 11-1(3(1)):230kV (Overland Portion) –Not Applicable.

Conductor	Phase	Earthwires	
Designation (Code Name)	ACCC (ACSR Mallard equal diameter)	7X4.00mm GSW	7X4.00mm GSW equiv. OPGW
Type	ACCC	Galvanized Steel	-
Reference standards	ASTM/IEC/BSEN	ASTM/IEC/BSEN	IEC, ITU, IEEE
Aluminium/Aluminium alloy grade	1350 O	-	-
Steel grade	-	-	-
Galvanising Thickness	-	-	-
Aluminium class (AS wire)	-	-	-
Aluminium type (AS wire)	-	-	20SA
Conductor max. continuous operating temperature (°C)	180	-	-
Minimum mass of grease (kg/km)	-	-	-
Creep period of conductor to be considered (years)	-	-	-
No. and diameter of aluminium wire (No./mm)	-	-	-
No. and diameter of steel wire (No./mm)	-	7/4.00	-
Overall diameter of conductor (mm)	Max. 28.95	12	12
Overall sectional area of conductor (mm^2)	-	-	-
Rated tensile strength of conductor (kN)	Max. 159.7	101	-
Weight (kg/km)	Max. 1888	690	-
Direction of external lay	Right hand	Right hand	Right hand
Cross Sectional Area of Al (mm^2)	-	-	-
Cross Sectional Area of Composite Core (mm^2)	-	-	-
No. of Composite Core (mm)	1	-	-
Shape of wires	All trapezoidal	Round	Round
Diameter of Composite Core (mm)	8.76	-	-
Rated tensile strength of core (kN)	-	-	-
Current carrying capacity at 180 Deg C (amp)	-	-	-
Max. allowable emergency operating temp.(Deg C)	200	-	-
Maximum DC Resistance at 20 Deg C (ohm/km)	0.0514	-	-

Note:
(i) Number and diameter of the aluminium strands will depend on the conductor manufacturer. The manufacturer must show the aluminum cross-section meets the nominal cross-sectional area shown.
(ii) 40degC ambient, 0.61m/sec wind, 1033 W/sq.m sun
(iii) Absorptivity 0.9 and Emissivity 0.7

Annex 11-1(3(1)):230kV (Overland Portion) – ACSR Mallard

Conductor	Phase	Earthwires	
Designation (Code Name)	Mallard	7X4.00mm GSW	7X4.00mm GSW equiv. OPGW
Type	ACSR	Galvanized Steel	-
Reference standards	ASTM/IEC/BSEN	ASTM/IEC/BSEN	IEC, ITU, IEEE
No. and diameter of aluminium wire (No./mm)	30/4.135	-	-
No. and diameter of steel wire (No./mm)	19/2.482	7/4	-
Overall diameter of conductor (mm)	28.95	12	12
Conductor operating temperature range (°C)	5-80	-	-
Rated tensile strength of conductor (kN)	171.25	101	Approx. 76
Weight (kg/km)	1,888	690	-
Direction of external lay	Right hand	Right hand	Right hand
Maximum DC Resistance at 20 Deg C (ohm/km)	-	-	-
Minimum mass of grease (kg/km)	-	-	-
Creep period of conductor to be considered (years)	20	-	-

Notes:

ACSR conductor shall be applied with grease in all layers for protection of steel from corrosion according to the relevant standard.

GTP of Twin AAAC Conductor for Tension Fittings only:

2.3.3 230 kV Line- Twin 37/4.176 AAAC Conductor

Standards for design workmanship an
Performance as stipulated in the contra

Fill out 1 form for each manufacturer

Conductor	Phase		Earthwire	
	As per Bid requirement	As per Bid Proposal	As per Bid requirement	As per Bid Proposal
Designation (Code Name)		AAAC		
Type		Type B		
Reference standards		IEC 61089		
Aluminium/ Aluminium alloy grade		6201-T81		
Steel grade		-		
Galvanising Thickness		-		
Aluminium class (AS wire)		-		
Aluminium type (AS wire)		-		
Conductor max. continuous operating temperature (°C)		80		
Minimum mass of grease (kg/km)		41		
Creep period of conductor to be considered (years)		20		
No. and diameter of aluminium wire (No./mm)		37/4.176		
No. and diameter of steel wire (No./mm)		-		
Overall diameter of conductor (mm)		29.23		
Overall sectional area of conductor (mm^2)		506.77		
Rated tensile strength of conductor (kN)		148 -Min.		
Weight (kg/km) (Nominal -Without Grease)		1399		
Direction of external lay		Right Hand (Z)		
Cross Sectional Area of Al (mm^2)		-		
Cross Sectional Area of Composite Core (mm^2)		-		
No. of Composite Core (mm)		-		
Shape of wires		-		
Diameter of Composite Core (mm)		-		
Rated tensile strength of core (kN)		-		
Current carrying capacity at 180 Deg C (amp)		-		
Max. allowable emergency operating temp. (Deg C)		-		
Maximum DC Resistance at 20 Deg C (ohm/km)		0.0671		

FOR AAAC CONDUCTOR:-

1) The Inner layers of the conductor shall be greased as per case-2 of IEC 61089 with Type A of IEC 61394 having minimum drop point 150°C.
2) The Weight of the conductor with grease shall be 1440 Kg/km Nominal.
3) Minimum Breaking load of strand, Before stranding =4.23 KN, After stranding = 4.02 KN
4) Maximum DC Resistance of individual wire at 20°C = 2.436 ohm/km

Annex 11-1(4):230kV (River crossing Portion) – Not applicable

Conductor	Phase	Earthwires	
Designation (Code Name)	ACCC (ACSR Mallard equal diameter)	19x3.67	19x3.67 equiv. OPGW
Type	ACCC	20SA	-
Reference standards	ASTM/IEC/BSEN	IEC 61232	IEC, ITU, IEEE
Aluminium/Aluminium alloy grade	1350 O	-	-
Steel grade	-	-	-
Galvanising Thickness	-	-	-
Aluminium class (AS wire)	-	-	-
Aluminium type (AS wire)	-	-	20SA
Conductor max. continuous operating temperature (°C)	180	-	-
Minimum mass of grease (kg/km)	-	12	-
Creep period of conductor to be considered (years)	-	-	-
No. and diameter of aluminium wire (No./mm)	-	-	-
No. and diameter of steel wire (No./mm)	-	-	Not applicable
Overall diameter of conductor (mm)	Max. 28.95	18.35	-
Overall sectional area of conductor (mm^2)	-		158
Rated tensile strength of conductor (kN)	159.7		-
Weight (kg/km)	Max. 1888		-
Direction of external lay	Right hand	Right hand	Right hand
Cross Sectional Area of Al (mm^2)	-	-	-
Cross Sectional Area of Composite Core (mm^2)	-	-	-
No. of Composite Core (mm)	1	-	-
Shape of wires	All trapezoidal	Round	Round
Diameter of Composite Core (mm)	8.76	-	-
Rated tensile strength of core (kN)	-	-	-
Current carrying capacity at 180 Deg C	-	-	-
Max. allowable emergency operating temp. (Deg C)	200	-	-
Maximum DC Resistance at 20 Deg C (ohm/km)	0.0514	-	0.323

Note:
(i) Number and diameter of the aluminium strands will depend on the conductor manufacturer. The manufacturer must show the aluminum cross-section meets the nominal cross-sectional area shown.
(ii) 40degC ambient, 0.61m/sec wind, 1033 W/sq.m sun
(iii) Absorptivity 0.9 and Emissivity 0.7

Annex 11-1(5): 132kV(Overland Portion)

Conductor	Phase		Earthwires	OPGW
Designation (Code Name)	Grosbeak	Finch-Not Applicable	7x3.25 GS Earthwire	OPGW 7x3.25 GS equiv.
Type	ACSR	ACSR		"A"
Reference standards	ASTM B232	ASTM B232		IEC 61089
Aluminium Alloy Grade Steel Grade	- -	- -		as appropriate
Galvanising Thickness	-	-		-
Aluminium class (AS wire)	Ref IEC 61232	Ref IEC 61232		-
Aluminium type (AS wire)	-	-		20 % IACS
Conductor operating temperature range (°C)	5-80	5-80		-
Minimum mass of grease (kg/km)	-	As per technical specification		-
Creep period of conductor to be considered (years)	20	20		-
Number and diameter of wire (no./mm)	A1. 26/3.973 St. 7/3.089	54/3.647 19/2.189		-
Overall diameter (mm)	25.16	32.83	9.75	-
Nominal breaking load (kN)	112	173.8		-
Weight (kg/km)	-	2,121		-
Direction of external lay	Right hand	Right hand		Right hand

Notes:

ACSR conductor shall be applied with grease in all layers for protection of steel from corrosion according to the relevant standard.

Annex 11-1(6): 132kV [River Crossing Portion] – Not applicable

Conductor	Phase	Earthwire	OPGW
Designation (Code Name)	Mallard	G.S. Earthwire	Equivalent of 7x4.25 mm Earthwire
Type	ACSR		
Standard	ASTM B232	BS 183 Grade 1150	
Aluminium class (AS wire)	Ref. IEC 61232	-	
Conductor Operating Temperature Range(°C)	5-80	4-53	
Minimum mass of grease (kg/km)	-	-	
Creep period of conductor to be considered (years)	20	-	
No. and diameter of Aluminum wire (No./mm)	Al 30/4.135	-	
No. and diameter of Steel wire (No./mm)	St 19/2.482	7/ 4.25	
Overall diameter of wire (mm)	28.95	-	
Sectional Area of Aluminium (sq.mm)	-	-	
Total sectional area (sq.mm)	-	-	
Calculated DC resistance at 20 deg. Celsius (ohm/km)	-	-	
Overall section area of wire (mm²)	-	-	
Nominal breaking load (kN)	171.25	-	
Weight (kg/Km)	1,888	-	
Direction of external lay	Right hand	Right hand	

Annex11-1(7): 132kV – Overland Portion (ACCC Grosbeak) – Not applicable

Conductor	Phase
Designation (Code Name)	ACCC Grosbeak (ACSR Grosbeak equiv. diameter)
Type	ACCC
Reference standards	ASTM/IEC/BSEN
Aluminium/Aluminium alloy grade	1350 O
Steel grade	-
Galvanising Thickness	-
Aluminium class (AS wire)	-
Aluminium type (AS wire)	-
Conductor max. continuous operating temperature (°C)	180
Minimum mass of grease (kg/km)	-
Creep period of conductor to be considered (years)	-
No. and diameter of aluminium wire (No./mm)	Refer Note (i)
No. and diameter of steel wire (No./mm)	-
Overall diameter of conductor (mm)	25.16 (max.)
Overall sectional area of conductor (mm^2)	-
Rated tensile strength of conductor (kN)	112
Weight (kg/km)	1280 (max.)
Direction of external lay	Right hand
Cross Sectional Area of Al (mm^2)	
Cross Sectional Area of Composite Core (mm^2)	
No. of Composite Core (mm)	1
Shape of wires	All trapezoidal
Diameter of Composite Core (mm)	
Rated tensile strength of core (kN)	
Current carrying capacity at 120 Deg C (amp)	1220 Min.
Current carrying capacity at 180 Deg C (amp)	
Max. allowable emergency operating temp.(Deg C)	200
Maximum DC Resistance at 20 Deg C (ohm/km)	0.068
Co-efficient of linear expansion (per Deg C)	

Note:
(i) Number and diameter of the aluminium strands will depend on the conductor manufacturer. The manufacturer must show the aluminum cross-section meets the nominal cross-sectional area shown.
(ii) 40degC ambient, 0.61m/sec wind, 1033 W/sq.m sun
(iv) Absorptivity 0.9 and Emissivity 0.7

Annex 11-2: Sub-conductor Configuration

Configuration	Spacing (mm x mm)	Orientation	Notes
Twin	450	Horizontal	230 kV
Quad	450 x 450	Square	400 kV – Not applicable

Annex 11-3: Portion Conductor System Loading

Annex 11-3(1): Conductor System Loading - 400kV Overland Portion– Not applicable

Conductor	Unit	Phase			Earthwire	
Code Name		ACCC Dhaka (ACSR Finch equal diameter)-NA	ACSR Finch	ACSR Chuker-NA	ACSR Dorking	OPGW
Maximum Working Tension Conditions (MWT)						
Maximum allowable tension	kN	as per Section 8. Tower				
Wind pressure	N/m²	as per Section 8. Tower				
Temperature	°C	5	5	5	5	5
Every-day conditions (still air):						
Maximum tension	kN	as per Section 8. Tower				
Temperature	°C	as per Section 2. Site Particulars				
Erection Conditions (still air)						
Max. tangential tension	kN	n.a.	n.a.	n.a.	n.a.	n.a.
Temperature	°C					
Sagging limits of earthwire:						
Sagging limits of earthwire as a percentage of sag of conductor used in the same section.	%	n.a.	n.a.	n.a.	Max 90	Max 90
Conductor temperature	°C	180	80	80	50	50

Note:

1. OPGW to be sag matched to earthwire.

Annex 11-3(2): Conductor System Loading - 400kV River Crossing Portion – Not applicable

Conductor	Unit	Phase	Earthwire	
Code Name		ACCC Dhaka-ULS (ACSR Finch equal diameter)	19x3.67	19x3.67 equiv. OPGW
Maximum Working Tension Conditions (MWT)				
Maximum allowable tension	kN	as per Section 8. Tower		
Wind pressure	N/m²	as per Section 8. Tower		
Temperature	°C	5	5	5
Every-day conditions (still air):				
Maximum tension	kN	as per Section 8. Tower		
Temperature	°C	as per Section 2. Technical Particulars		
Erection Conditions (still air)				
Max. tangential tension	kN	n.a.	n.a.	n.a.
Temperature	°C			
Sagging limits of earthwire:				
Sagging limits of earthwire as a percentage of conductor sag	%	n.a.	Max 90	Max 90
Conductor temperature	°C	180	50	50

Notes1: OPGW to be sag matched to earthwire.

Annex 11-3(3): Conductor System Loading – 230kV – Overland Portion

Conductor	Unit	Phase	Earthwire	
Code Name		ACSR Mallard	OPGW 7x4.0 GS Equiv.	GS 7 x 4.0
Maximum Working Tension Conditions (MWT)				
Maximum allowable tension	kN	as per Section 8. Tower		
Wind pressure	N/m²	as per Section 8. Tower		
Temperature	°C	5	5	5
Every-day conditions (still air):				
Maximum tension of phase conductor	kN	as per Section 8. Tower		
Temperature	°C	as per Section 2. Technical Particulars		
Erection Conditions (still air)				
Max. tangential tension	kN	n.a.	n.a.	n.a.
Temperature	°C			
Sagging limits of earthwire:				
Sagging limits of earthwire as a percentage of conductor sag	%	n.a.	Max 90	Max 90
Conductor temperature	°C	80	50	50

Notes:

1. OPGW sag to be matched with earthwire.

Annex 11-3(4): Conductor System Loading – 230kV – River Crossing Portion– Not applicable

Conductor	Unit	Phase	Earthwire	
Code Name		ACSR Mallard equal dia. ACCC	19x3.67 ACS	19x3.67 equiv. OPGW
Maximum Working Tension Conditions (MWT)				
Maximum allowable tension	kN	107.73		
Wind pressure	N/m²	as per Section 8. Tower		
Temperature	°C	5	5	5
Every-day conditions (still air):				
Maximum tension	kN	34.2		
Temperature	°C	as per Section 2. Technical Particulars		
Erection Conditions (still air)				
Max. tangential tension	kN	n.a.	n.a.	n.a.
Temperature	°C			
Sagging limits of earthwire:				
Sagging limits of earthwire as a percentage of conductor sag	%	n.a.	Max 90	Max 90
Conductor temperature	°C	180	50	50

Notes:

1. OPGW sag to be matched with earthwire.

Annex 11-3(5): Conductor System Loading - 132kV [Overland Portion]

Conductor	Unit	Phase	OPGW	Earthwire
Code Name		ACSR Grosbeak	GS 7x3.25 equiv. OPGW	GS 7x3.25
Maximum Working Tension Conditions (MWT)				
Maximum allowable tension	kN	as per Section 8. Tower		
Wind pressure	N/m²	as per Section 8. Tower		
Temperature	°C	5	5	5
Every-day conditions (still air):				
Maximum tension	kN	as per Section 8. Tower		
Temperature	°C	as per Section 8. Tower		
Erection Conditions (still air)				
Max. tangential tension	kN	n.a.	n.a.	n.a.
Temperature	°C			
Sagging limits of earthwire:				
Sagging limits of earthwire as a percentage of conductor sag	%	n.a.	Max 90	Max 90
Conductor temperature	°C	80	50	50

Notes:

1. OPGW to be sag matched to earthwire.

Annex 11-3(6): Conductor System Loading - 132kV [River Crossing Portion] – Not applicable

Conductor	Unit	Phase	Earthwire OPGW
Code Name		ACSR Mallard	7X4.25 S Equiv.
Maximum Working Tension Conditions (MWT)			
Maximum allowable tension	kN	As per tower section	
Wind pressure	N/m²	As per tower section	
Temperature	°C	5	5
Every-day conditions (still air):			
Maximum tension	kN	As per tower section	
Temperature	°C	As per Section 2. Technical Particulars	
Erection Conditions (still air)			
Max. tangential tension	kN	n.a.	n.a.
Temperature	°C		
Sagging limits of earthwire:			
Sagging limits of earthwire as a percentage of conductor sag	%	n.a.	90
Conductor temperature	°C		5

Notes:

1. B.L. is minimum breaking strength of OPGW.
2. OPGW to be sag matched to earthwire.

Annex 11-4: Test Procedures of Conductor

Annex 11-4(1): Tests on ACCC Conductor -Not Applicable

1.1 UTS Test on Stranded Conductor

Circles perpendicular to the axis of the conductor shall be marked at two places on a sample of conductor of minimum 5 m length between fixing arrangement suitably fixed by appropriate fittings on a tensile testing machine. The load shall be increased at a steady rate up to 50% of minimum specified UTS and held for one minute. The circles drawn shall not be distorted due to relative movement of strands. Thereafter the load shall be increased at steady rate to minimum UTS and held for one minute. The Conductor sample shall not fail during this period. The applied load shall then be increased until the failing load is reached and the value recorded.

1.2 Corona Extinction Voltage Test (Not applicable)

The sample of the conductor of 5 m length shall be strung at a height not exceeding 7.01 m above ground. The sample assembly when subjected to power frequency voltage shall have a corona extinction voltage of not less than 154kV (rms) line to ground under dry condition. There shall be no evidence of corona on any part of the samples. The test should be conducted without corona control rings. However, small corona control rings may be used to prevent corona in the end fittings. The voltage should be corrected for standard atmospheric conditions.

1.3 Radio Interference Voltage Test (Not applicable)

Under the conditions as specified under (1.2) above, the conductor samples shall have radio interference voltage level below 1000 microvolts at one MHz when subjected to 50 Hz AC voltage of 154 kV line to ground under dry conditions. This test may be carried out with corona control rings and arcing horns.

1.4 D.C. Resistance Test on Stranded Conductor

On a conductor sample of minimum 5m length two contact-clamps shall be fixed with a predetermined bolt torque. The resistance shall be measured by a Kelvin double bridge by placing the clamps initially zero metre and subsequently one metre apart. The test shall be repeated at least five times and the average value recorded. The value obtained shall be corrected to the value at 20^0C as per relevant IEC/BS/equivalent standard. The resistance corrected at 20^0C shall conform to the requirements indicated in the STP.

1.5 High Temperature endurance & creep test

Two conductor samples of length equal to at least 100 X d + 2 X a (where, d is the conductor diameter and a is the distance between the end fitting and the gauge length) shall be strung at tension equal to 25 % of conductor UTS. The distance, a, shall be at least 25 % of the gauge length or 2 m whichever is the smaller. The conductor samples shall be subjected to tests as indicated below:

(i) On one of the conductor samples, the conductor temperature shall be maintained at 20 deg C for 1000 hours. The elongation/creep strain of the conductor during this period shall be measured and recorded at end of 1 hour, 10 hour, 100 hour and subsequently every 100 hour upto 1000 hours time period.

(ii) On other conductor sample, the conductor temperature shall be increased to designed maximum temperature in steps of 20 deg. C and thermal elongation of the conductor sample shall be measured & recorded at each step. The temperature shall be held at each step for sufficient duration for stablisation of temperature. Further, the temperature of the conductor shall be maintained at maximum continuous operating temperature (±10 Deg. C) for 1000 hours. The elongation/creep strain of the conductor during this period shall be measured and recorded at end of 1 hour, 10 hour, 100 hour and subsequently every 100 hour upto 1000 hours time period.

The supplier shall furnish details of creep characteristic in respect of the conducted based on laboratory test and other laboratory investigations/ experimental conducted on similar type of conductor and shall indicate creep strain values corresponding to 1 month, 6 month, 1 year, 10 year & 20 year creep at everyday tension & continuous designed temperature as well as room temperature.

1.6 Sheaves Test

The conductor sample of minimum length of 35 meter shall be tested in accordance with IEC 60794-1-2, Section 20, Figure 27 (Procedure 4) with the following details: Tension shall be 10% of the conductor UTS; pulley diameter shall be at least 35 times that of the conductor; angle between the pulleys shall be of 20 degrees. . The conductor shall be passed over the pulleys a minimum of 18 times at a speed of 0.2 to 0.5 m/sec. After this test, UTS test of the conductor shall be performed and evaluated. In the case of polymer composite core conductor, the core shall be inspected for any sign of damage or cracking by subjecting the core to a dye penetration test as per ASTM section 14. Dye penetrant exposure time shall be 30+1/-0 minutes.

1.7 Axial Impact Test

The conductor sample shall be suspended vertically and load applied by dropping a 650 Kg from an elevation of 4 meters above the sample. The impact velocity shall be not be less than 8 m/sec. with an initial pre-tension of 200 kgs. The curve for load vs time shall be recorded and recorded load of failure for core shall not be less than UTS of core.

1.8 Radial Crush Test

A section of conductor is to be crushed between two six inch steel platens. Load shall be held at 350 Kgs for 1 minute and then released. All the Core strands/Core shall be subsequently disassembled and tensile tested. All the Core strands/ Core shall exhibit full strength retention vis-à-vis guaranteed braking strength of core wires (after stranding).

1.9 Torsional Ductility Test

The conductor sample of 10-15 m shall be loaded to 20% of UTS and then rotated in increasing steps of +/-180 deg. In case of INVAR type HTLS conductor, the entire conductor shall withstand at least 16 such rotation and there shall not be any damage to Aluminium Alloy or INVAR core wires.

In case of carbon-fibre composite core conductors, the conductor sample should be loaded to 10% of UTS and then rotated in increasing steps of +/- 180 deg. The sample length should be a minimum of 1500 times the composite core diameter and the test should be limited to four +/- 180 deg rotations. The twist rate must be specified to be a max. of 1 rotation per minute.

1.10 Aeolian Vibration Test

The conductor and supporting hardware shall be loaded to 25% of RTS. A dynamometer, load cell, calibrated beam or other device shall be used to measure the conductor tension. Some means should be provided to maintain constant tension to allow for temperature fluctuations during the testing. The overall span between system terminations shall be a minimum of 30 m. The span shall be supported at a height such that the static sag angle of the cable to horizontal is (1.5 ± 0.5) deg in the active span. Means shall be provided for measuring and monitoring the mid-loop (antinode) vibration amplitude at a free loop, not a support loop. An electronically controlled shaker shall be used to excite the conductor in the vertical plane. The shaker armature shall be securely fastened to the conductor so it is perpendicular to the conductor in the vertical plane. The shaker should be located in the span to allow for a minimum of six vibration loops between the suspension assembly and the shaker. The test shall be carried out at one or more resonance frequencies (more than 10 Hz) . The amplitude at the antinode point shall be one third of conductor diameter. The assembly shall be vibrated for not less than 10 million cycles without any failure. After the test, the conductor should not exhibit any damage (broken strands). The conductor shall be tested to demonstrate that it retains at least 95% RTS.

1.11 Temperature Cycle Test

The purpose of this test is verification of degradation characteristics of metallic and non-metallic material when subjected to thermal cycling temperature cycling can create large internal stresses due to thermal expansion mismatch between constituents.

Test Methods:

- Mechanical tension, 20 % RBS, marks on the conductor at the edge of the conductor
- 100 cycles from room temperature up to maximum temperature (180°C). Hold at maximum temperature ± 2.5 deg. C (duration of a cycle, 1 hour or so, non included cooling)
- Mechanical tension up to 70 % RBS at room temperature during 24 H and release to 20 % RBS.
- This cycling test shall be repeated 5 times.
- During the test, temperature of connectors, conductor and resistance are recorded according to ANSI C 119.
- A breaking load test is applied at the end of the test. Conductor strength has to be higher than 95 % RBS.

1.12 Heat Resistance test on Aluminium Alloy wire

Breaking load test as per clause 1.21 above shall be carried out before and after heating the sample in uniform heat furnace at following temperature for seventy two hours. The breaking strength of the wire after heating shall not be less than the 90% of the breaking strength before heating:

Maximum continuous operating temperature of the conductor	Test temperature
Upto 150 deg. C	230 deg. C (+5/-3 deg. C)
More than 150 deg. C & upto 210 deg. C	280 deg. C (+5/-3 deg. C)
More than 210 deg. C & upto 230 deg. C	400 deg. C (+5/-3 deg. C)

1.13 Bending test on aluminium clad core (if applicable)

A sample of aluminium clad invar strand measuring 30 cm in length shall be subject to bending with help of a vise. The vised length of wire should be 5 cm and radius of bend 4.8 mm. The bending should be first 90 degrees left and 90 degree right. After this operation the strand should cut at the bending point. There should be no separation of core and aluminium at the bending point after this operation.

1.14 Compression test on aluminium clad wires (if applicable)

A sample of aluminium clad core strand 10 mm in length is to be compressed by a plate with a load of 3600 kgs. The aluminium and core strand should not break.

1.15 Coefficient of linear expansion for composite core/ core wires

The temperature and elongation on a sample shall be continuously measured and recorded at interval of approximately 15 degree C from ambient temperature of lab (generally 20degree C) to maximum continuous operating temperature by changing the temperature by suitable means. Coefficient of linear expansion shall be determined from the measured results.

1.16 Strand Brittle fracture test (for polymer composite core only)

The sample shall be tensioned to approx. 25 % of UTS with simultaneous application of 1N-HNO3 acid directly in contact with naked polymer composite core for 96 hrs. The contact length of acid shall not be less than 40mm and thickness around the core not less than 10mm.The rod shall withstand UTS test after 96 hours.

1.17 Visual and Dimensional Check on Drums

The drums shall be visually and dimensionally checked to ensure that they conform to the approved drawings.

1.18 Visual Check for Joints, Scratches etc.

Conductor drums shall be rewound in the presence of the Employer. The Employer shall visually check for scratches, joints etc. and that the conductor generally conform to the requirements of this Specification. Ten percent (10%) drums from each lot shall be rewound in the presence of the Employer's representative.

1.19 Dimensional Check on Core Wires and Aluminium/ Aluminium Alloy Wires

The individual strands shall be dimensionally checked to ensure that they conform to the requirement of this Specification.

1.20 Check for Lay-ratios of Various Layers

The lay-ratios of various layers shall be checked to ensure that they conform to the guaranteed values furnished by the Contractor.

1.21 Galvanising Test

The test procedure shall be as specified in IEC: 888. The material shall conform to the requirements of this Specification. The adherence of zinc shall be checked by wrapping around a mandrel four times the diameter of steel wire.

1.22 Aluminum thickness on aluminum clad wires (if applicable)

The thickness of aluminium of the specimen shall be determined by using suitable electrical indicating instruments operating on the permeameter principle, or direct measurement. Measurements shall be read to three decimal places, and number rounded to two decimal places is considered as measured thickness. For reference purposes, direct measurement shall be used to determine aluminium thickness on specimens taken from the end of the coils.

1.23 Torsion and Elongation Tests on Composite Core/ INVAR Core wires

For INVAR type HTLS conductor, the test procedures shall be as per clause No. 10.3 of IEC 888. In torsion test, the number of complete twists before fracture shall not be less than the value specified in the GTP on a length equal to 100 times the standard diameter of the strand. In case test sample length is less or more than 100 times the stranded diameter of the strand, the minimum number of twists will be proportioned to the length and if number comes in the fraction then it will be rounded off to next higher whole number. In elongation test, the elongation of the strand shall not be less than the value specified in the GTP for a gauge length of 250 mm.

In case of composite core HTLS conductor, the following procedure shall be applicable:

i) **Elongation Test**:-The elongation of the composite core sample at shall be determined using extensometer. The load along the core shall be gradually increased. The elongation achieved on reaching the tensile strength of the core shall not be less than the value guaranteed in the GTP.

ii) **Torsion Test** : The purpose of the test is to determine the resilience of the composite core to twisting and to show that after the composite core has experienced the prescribed twisting, it will not crack or have a loss in tensile strength due to the twisting. ASTM B987 Table 2, a sample shall be cut long enough as to have a gauge length that is 170 times the diameter of the composite core being tested, between the gripping fixtures. For Extra High Strength Grade composite core as per ASTM B987 Table 2, a sample shall be cut long enough as to have a gauge length that is 340 times the diameter of the composite core being tested, between the gripping fixtures. One grip shall then be fixed so that it does not twist and the other end shall be twisted a full 360 degrees and then fixed in this position for 2 minutes. Once the twist time is completed, the core is untwisted an inspected for any crazing or other damage. If no damage is observed, the composite core is then tensile tested to failure and the final load recorded. For the test to be accepted, the composite core must withstand at least 100% of its rated tensile strength. Two samples need to be completed in order to satisfy the testing requirement.

1.24 Breaking load test on Aluminium/ Aluminium Alloy & Composite core/ INVAR Core wires and D.C Resistance test on Aluminium/ Aluminium Alloy wire

The above tests shall be carried out as per IEC: 888/889 or relevant international standards and the results shall meet the requirements of the specification. Breaking Load test on composite core shall be carried out as per ASTM B987 and the results shall meet the requirements of specification.

1.25 Wrap test on Core wires (Applicable for steel/Al clad Steel/invar core only)

The wrap test on core strands shall be meet the requirements of IEC: 888. In case of aluminium clad core wire, the same shall be wraped around a mandel of diameter of five times that of the strand to form a helix of eight turns. The strand shall be unwrapped. No breakage of strand shall occurred.

1.26 Minimum conductivity test on thermal resistant aluminium alloy wire

Resistivity test as per IEC-468/IEC 889 shall be conducted to confirm minimum conductivity as per specification requirement.

1.27 Procedure Qualification test on welded Aluminium/ Aluminium Alloy wire.

Two Aluminium/ Aluminium Alloy wire shall be welded as per the approved quality plan and shall be subjected to tensile load. The breaking strength of the welded joint of the wire shall not be less than the guaranteed breaking strength of individual strands.

1.28 Ageing Test on Filler (if applicable)

The test shall be done in accordance with Grease drop point test method. The specimen should be drop as a droplet when kept at a temperature 40 deg. C above designed maximum operating temperature of the conductor for 30 minutes. The temperature shall then be increase till one droplet drops and the temperature recorded.

1.29Aluminium conductivity test on aluminium clad wire (if applicable)

Resistivity test as per IEC-468 shall be conducted to confirm minimum conductivity as per specification requirement.

1.30 Glass Transition Temperature Test (for polymer composite core only)

Tg shall be determined in accordance with ASTM B987 and the test method shall be in accordance with ASTM D7028 (- A Standard Test Method for Glass Transition Temperature Polymer Matrix Composites by Dynamic Mechanical Analysis). The glass transition temperature shall be greater than the maximum continuous operating temperature of the offered HTLS conductor+25° C, and the Tg shall be measured as the peak in the Loss Modulas curve as per ASTM B897.)

1.31 Flexural Strength Test (for polymer composite core only)

Test method shall be as per ASTM D7264, ASTM D4475 or ISO 14125. The required values shall be based on the average of 5 test specimens

1.32 Bending Test on Composite Core

a. For type test, two composite core samples shall be tensioned to 7.5% of the rated tensile strength of the composite core and wrapped 180 degrees around a cylindrical mandrel. Tension may be measuredon one of the conductor ends or at the bending mandrel. If tension is measured at the bending mandrel, the load shall be 15% of the rated tensile strength. The application of bending and tension loads may be independent or combined provided that full bending load and tension load are simultaneously held for a minimum of 1 minute. The mandrel diameter shall be not more than 50 times the diameter of the composite core. After completion of the two bending tests, one core sample shall withstand UTS test and one core sample shall be subjected to dye penetration test as per ASTM B987 section 14. Dye penetrant exposure time shall be 30+1/-0 minutes.
However, for extra high strength grade composite core, the mandrel diameter shall be not more than 60 times the diameter of the composite core.

b. For acceptance test, test each reel as follows: Two composite core samples, one from the start and one from the end of the reel, shall be tensioned to 7.5% of the rated tensile strength of the composite core and wrapped 180 degrees around a cylindrical mandrel. Tension may be measured on one of the conductor ends or at the bending mandrel. If tension is measured at the bending mandrel, the load shall be 15% of the rated tensile strength. The application of bending and tension loads may be independent or combined provided that full bending load and tension load are simultaneously held for a minimum of 1 minute. The mandrel diameter shall be not more than 50 times the diameter of the composite core. The core shall not break or split during the 1 minute hold.
However, for extra high strength grade composite core, the mandrel diameter shall be not more than 60 times the diameter of the composite core.

1.33 Chemical Analysis of Aluminium/ Aluminium Alloy and Composite core/ INVAR Core Wires

Samples taken from the Aluminium /Aluminium Alloy and core coils/ strands shall be chemically/spectrographically analyzed. The same shall be in conformity to the particulars guaranteed by the bidder so as to meet the requirements stated in this Specification.

Samples taken from the composite core shall be analyzes using DMA in accordance with above of this section 1.30 of Annex 11-4(1).

1.34 Chemical Analysis of Zinc

Samples taken from the zinc ingots shall be chemically/ spectrographically analyzed. The same shall be in conformity to the requirements stated in the Specification.

1.35 Galvanic Protection Barrier Layer Thickness

Determination of the minimum thickness of the galvanic protection barrier layer shall be done by microscopic examination and the minimum thickness shall be determined using an optical comparator or equivalent technique. The minimum thickness shall be as per requirement of latest edition of ASTM B987.

Annex 11-4a: Test Procedures of Conductor

1.1 UTS Test on Stranded Conductor

Circles perpendicular to the axis of the conductor shall be marked at two places on a sample of conductor of minimum 5 m length between fixing arrangement suitably fixed on a tensile testing machine. The load shall be increased at a steady rate upto 50% of minimum specified UTS and held for one minute. The circles drawn shall not be distorted due to relative movement of strands. Thereafter the load shall be increased at steady rate to 100% of the UTS and held for one minute. The Conductor sample shall not fail during this period. The applied load shall then be increased until the failing load is reached and this value shall be recorded.

1.2 Corona Extinction Voltage Test

NOT APPLICABLE

1.3 Radio Interference Voltage Test

NOT APPLICABLE

1.4 D.C. Resistance Test on Stranded Conductor

On a conductor sample of minimum 5m length two contact-clamps shall be fixed with a predetermined bolt torque. The resistance shall be measured by a Kelvin double bridge by placing the clamps initially zero metre and subsequently one metre apart. The test shall be repeated at least five times and the average value recorded. The value obtained shall be corrected to the value at 20^0C as per relevant IEC/BS/equivalent standard. The resistance corrected at 20^0C shall conform to the requirements indicated in the STP.

1.5 Chemical Analysis of Aluminium and Steel

Samples taken from the Aluminium and steel ingots/coils/strands shall be chemically/spectrographically analysed. The same shall be in conformity to the requirements stated in this Specification.

1.6 Visual and Dimensional Check on Drums

The drums shall be visually and dimensionally checked to ensure that they conform to the requirements of this Specification.

1.7 Visual Check for Joints, Scratches etc.

Conductor drums shall be rewound in the presence of the Purchaser. The Purchaser shall visually check for scratches, joints etc. and that the conductor generally conform to the requirements of this Specification. Five percent (5%) to ten percent (10%) drums from each lot shall be rewound in the presence of the Purchaser's

representative. The actual quantity will be discussed and mutually agreed to by the Supplier & Purchaser in the Quality Assurance Programme.

1.8 Dimensional Check on Steel and Aluminium Strands

The individual strands shall be dimensionally checked to ensure that they conform to the requirement of this Specification.

1.9 Check for Lay-ratios of Various Layers

The lay-ratios of various layers shall be checked to ensure that they conform to the requirements of this Specification.

1.10 Procedure Qualification test on welded Aluminium strands.

Two Aluminium/ Aluminium Alloy wire shall be welded as per the approved quality plan and shall be subjected to tensile load. The breaking strength of the welded joint of the wire shall not be less than the breaking strength of individual strands.

1.11 Chemical Analysis of Zinc

Samples taken from the zinc ingots shall be chemically/ spectrographically analysed. The same shall be in conformity to the requirements stated in the Specification.

1.12 Galvanising Test

The test procedure shall be as specified in IEC: 60888. The material shall conform to the requirements of this Specification. The adherence of zinc shall be checked by wrapping around a mandrel four times the diameter of steel wire.

1.13 Torsion and Elongation Tests on Steel Strands

The test procedures shall be as per clause No. 10.3 of IEC : 60888. In torsion test, the number of complete twists before fracture shall not be less than that indicated in the STP. In case test sample length is less or more than 100 times the stranded diameter of the strand, the minimum number of twists will be proportioned to the length and if number comes in the fraction then it will be rounded off to next higher whole number. In elongation test, the elongation of the strand shall not be less than 4% for a gauge length of 250 mm.

1.14 Check on Barrel Batten strength of Drums

The details regarding barrel batten strength test will be discussed and mutually agreed to by the Supplier & Purchaser in the Quality Assurance Programme.

TEST PROCEDURE OF STEEL EARTHWIRE

1.1 UTS Test

Circles perpendicular to the axis of the earthwire shall be marked at two places on a sample of earthwire of minimum 5 m length suitably compressed with dead end clamps at either end. The load shall be increased at a steady rate upto 50% of UTS and held for one minute. The circles drawn shall not be distorted due to relative movement of strands. Thereafter the load shall be increased at steady rate to 100% of UTS and held for one minute. The earthwire sample shall not fail during this period. The applied load shall then be increased until the failing load is reached and the value recorded.

1.2 D.C. Resistance Test

On a earthwire sample of minimum 5m length two contact clamps shall be fixed with a predetermined bolt torque. The resistance shall be measured by a Kelvin double bridge by placing the clamps initially at zero metre and subsequently one metre apart. The test shall be repeated at least five times and the average value recorded. The value obtained shall be corrected to the value at 20^0C. The resistance corrected at 20^0C shall conform to the requirements of this Specification.

1.3 Chemical Analysis of Zinc

Samples taken from the zinc ingots shall be chemically/ spectrographically analysed. The same shall be in conformity to the requirements stated in the Specification.

1.4 Chemical Analysis of Steel

Samples taken from the steel ingots/coils/strands shall be chemically,/ spectrographically analysed. The same shall be in conformity to the requirements stated in this Specification.

1.5 Visual and Dimensional Check on Drums and its barrel strength test.

The drums shall be visually and dimensionally checked to ensure that they conform to the requirements of this Specification. The details regarding barrel strength test will be discussed and mutually agreed to by Contractor and Purchaser in the quality assurance programme.

1.6 Visual Check for Joints, Scratches etc. and Length of Earthwire

Ten percent drums from each lot shall be rewound in the presence of the Purchaser. The Purchaser shall visually check for scratches, joints etc. and see that the earthwire generally conforms to the requirements of this Specification. The length of earthwire wound on the drum shall be measured with the help of counter meter during rewinding.

1.7 Dimensional Check

The individual strands shall be dimensionally checked to ensure that they conform to the requirement of this Specification.

1.8 Lay Length Check

The lay length shall be checked to ensure that they conform to the requirements of this Specification.

1.9 Galvanising Test

The test procedure shall be as per relevant IEC/BS/equivalent standard. The material shall conform to the requirements of this Specification. The adherence of zinc shall be checked by wrapping around a mandrel four times the diameter of steel wire.

1.10 Torsion Test

The minimum number of twists which a single steel strand shall withstand during torsion test shall be eighteen for a length equal to 100 times the standard diameter of the strand. In case test sample length is less or more than 100 times the stranded diameter of the strand the minimum number of twists will be proportioned to the length and if number comes in the fraction then it will be rounded off to next higher whole number.

Annex 11-5: Engineering Documents to be Submitted by Contractor

Clause Reference	Document Description	Comment
11.2.1	Design of non-standard conductors	
11.6.1	Conductor erection-method statement	
11.6.2	Conductor joint schedule	See also clause 4.7
11.6.5	Inelastic extension -creep calculation	
11.6.6	Sag and tension calculations	See also clause 4.7
11.6.7	Temporary guy - support loading	
11.6.11	Temporary scaffolds - calculations & drawings	
11.6.12	Live line scaffolds - calculation & drawings	
11.7.2	Conductor grease - type test results	
11.7.5	Galvanising test results	If requested
11.7.5	Ingot zinc certificates	If requested
11.7.10	Aluminium clad steel certificates	If requested
11.7.9	Metallic materials - test certificates	
11.7.9	Conductor grease - type test results	
11.7.9	Conductor - sample test results	
11.7.9	Conductor grease - sample test results	
11.7.10	Certificate of conformity	
11.7.15	Bolt tightness	If requested
11.7.18	Final records - SIMM	If requested

Annex 11-6: Notification and Hold Points

Clause Reference.	Notification Point	Hold Point
11.2.1		Non-standard conductor
11.6.1		Method statement
11.6.2		Conductor joint schedule
11.6.3		Repair sleeves
11.6.6		Conductor sags & tensions
11.6.9	Conductor sagging	
11.6.11		Temporary scaffolds
11.6.12		Live line scaffolds
11.6.15	Joint in go fold conductors	
11.7.1	Conductor sample tests	
11.7.2		Conductor grease type tests
11.7.13		Jointing competence
11.7.17	Final line route inspection	Continuity test

Annex 11-7: Reference Standards

The reference standards and other documents referred to in this section of the specifications are listed below:

IEC 60104:	Aluminium-magnesium-silicon alloy wire for overhead line conductors
IEC 60888:	Zinc coated steel wires for stranded conductors
IEC 60889:	Hard drawn aluminium wire for overhead line conductors
IEC 61089:	Round wire concentric lay overhead electrical stranded conductor
IEC 61232:	Aluminium-clad steel wires for electrical purposes
IEC 61395	Creep test procedure for stranded conductors
ASTM B987	Standard Specification for Carbon Fibre Composite Core (CFCC/TS) for used in Overhead Electric Conductors
	CIGRE Electra No. 75 "Permanent elongation of conductors. Predictor equation and evaluation method". SC22 WG05.
	ICAO - Aerodrome Annex 14 Volume 1 "Aerodrome Design and Operation"

12. Vibration Dampers

12.1 Scope

12.1.1 General

Vibration dampers shall be either of the Stockbridge type comprising two weights attached via a messenger cable to a conductor clamp, or spiral type (SVD) for installation on the conductor, OPGW or all dielectric self-supporting (ADSS) optical fibre cable for which the damper is designed.

12.1.2 Types and Uses

Reference shall be made to **Annex 12-1** for details of the specified requirements.

12.2 Design

12.2.1. When installed in accordance with the manufacturer's recommendations the vibration damper(s) shall limit the aeolian vibration levels so that the conductor bending strain in the surface of the outer wires, determined in accordance with the CIGRE/IEEE recommendations, shall not exceed 300 micro-strains peak to peak at the vibration damper clamp and at the adjacent suspension clamp or tension joint (dead end). This requirement shall be met for all frequencies up to f=1480/d Hz, where d is the conductor diameter in mm. The manufacturer shall provide either suitable laboratory test results, field test results or calculations to demonstrate to the Employer's satisfaction that this requirement is met for each damper/conductor combination.

12.2.2. The vibration damper shall be designed to perform satisfactorily under the environmental factors, including conductor temperature variations, ultra-violet radiation, ozone and atmospheric pollutants applicable to the Site. The vibration damper shall not damage or cause corrosion to the conductor or individual strands when installed or during service.

12.2.3. The weights for Stockbridge type dampers can be of equal or unequal weight and can have symmetrical or unsymmetrical shape. They can also be symmetrically or asymmetrically located on the messenger cable.

12.2.4. SVDs shall be manufactured from solid poly-vinyl-chloride (PVC) rod.

12.2.5. Vibration damper clamps shall be designed to ensure that it is not possible for the vibration damper to be removed from the conductor, without initially undoing the clamp bolt. The clamp design shall also ensure that after the bolt has been correctly tightened, no slackening of the clamp can occur in service. The clamp bolt shall be suitably modified to prevent them being completely removed inadvertently. Any nut shall be captive.

12.2.6. For OPGW and ADSS optical fibre cable, the transmission properties of the optical fibres shall be unaffected by the vibration damper. During installation the interface between the clamp and

the conductor shall be filled with grease to exclude moisture and this fact shall be taken into account in the design.

12.2.7. The messenger cable shall comprise a suitable number of high tensile steel wire strands, (minimum number 19), shall be straight and sufficiently stiff to remain straight when the vibration damper is suspended by its clamp. The attachment points of the cable to the clamp and to the weights shall be protected from water ingress. No relative movement shall be permitted between the clamp and the cable.

12.2.8. Damper weights shall be of a ferrous or zinc material and the design shall ensure that there is no contact between the weight and the conductor or the messenger cable when in service. Drain holes (minimum diameter 6 mm) shall be provided where applicable to ensure that any water entering the weights can escape.

12.2.9. The active part length of SVD's must capture one loop length of vibration.

12.2.10. Dampers shall be free from visible and audible corona discharge and radio interference at the voltage levels specified except those designed exclusively for use on earthwires.

12.2.11. No audible noise shall be induced by the wind under any weather conditions.

12.3 Materials

12.3.1. Materials used in the manufacture of vibration dampers shall be of:

a) Adequate strength for the intended application, service life requirements and free from defects which would affect their performance;
b) Shall not be liable to intergranular or stress corrosion;
c) Compatible with the conductor material, such that there can be no deleterious effects on the conductor or vibration damper resulting from their use;
d) The material shall not adversely be affected in the long term by a coating applied for corrosion protection.

12.3.2. Vibration damper clamps shall be made from aluminium or aluminium alloy of a suitable grade complying with the requirements of BS EN 1559, 1676 and 1706.

12.3.3. Messenger wires shall be made from high tensile steel wire having a minimum tensile strength of 1220 N/mm².

12.3.4. Malleable cast iron weights shall be made of a suitable grade complying with either BS EN 1562 or BS EN 1563. Grey cast iron weights shall be made of a suitable grade complying with BS EN 1561.

12.3.5. Cast zinc weights shall be made of a suitable grade complying with BS EN 1774 and 12844.

12.3.6. Bolts and nuts shall be ISO Metric Precision Hexagon to BS 3692. Metal washers shall be ISO Metric to BS 4320 "Bright Series", and spring washers shall be ISO Metric to BS 4464.

12.3.7. Non-metallic materials used shall have:

a) A good resistance to ageing;
b) Capable of withstanding service temperatures and voltages without detrimental change of properties;
c) Adequate resistance to the effects of nitrogen oxides, ozone, ultra-violet radiation and air pollution over the whole range of service temperatures.

12.4 Workmanship

12.4.1 General

The dimensions of the vibration dampers shall be shown on the contract drawings, together with material types and grades, protective treatment and any other pertinent information. Contract drawings shall be submitted to the Employer for approval. **This is a Hold Point.**

12.4.2 Identification

All vibration dampers shall be marked to ensure a system of traceability. Where practicable, and unless otherwise agreed between the Employer and the manufacturer, vibration dampers shall be clearly and indelibly marked with 3mm minimum high characters as follows:

a) Identification of vibration damper (reference number);
b) Manufacturer's identification;
c) Date of manufacture (month and year);
d) Conductor diameter range, or designation;
e) Clamp bolt installation torque.

In the case of SVD's the information required above shall be provided on tear-off labels.

12.4.3 Installation Criteria

The supplier shall be responsible for determining (a) the exact number of vibration dampers required for each individual phase in each span of the transmission line, (b) distance of the vibration damper from the suspension clamp or mouth of the tension joint (dead end), (c) in-span separation and (d) clamp bolt installation torque. The rate for supply of vibration damper shall be quoted accordingly.

12.5 Protective Treatment

12.5.1Vibration dampers shall either be inherently resistant to atmospheric corrosion, or suitably protected against corrosion, such as may occur in transit, storage and in service. All ferrous parts which will be exposed to the atmosphere in service except steel wire, shall be protected by hot-dipped galvanizing to comply with the requirements of BS ISO 1461.

12.5.2Steel messenger wires shall be hot-dipped galvanized to comply with the requirements of BS EN 10244-2.

12.5.3The ingot zinc used for galvanizing shall comply with the requirements of BS EN 1179.

12.5.4All external threads shall be cut or rolled before hot-dipped galvanizing. Nuts to be galvanized shall be subsequently tapped 0.4 mm oversize and threads oiled.

12.5.5All galvanized materials shall be stored on packing, clear of the ground and away from all material that might stain or corrode the galvanizing. Black steel packing or bins shall not be used.

12.6 Quality Control

12.6.1 General

Type and sample tests shall be undertaken on the vibration dampers in accordance with the requirements of this specification.

Type tests specified in clauses 12.6.2 to 12.6.10 shall be undertaken on a minimum of three samples which shall be identical in all essential details with the vibration dampers to be supplied.

Contract drawings previously submitted to the Employer shall be available at the time of testing.

The Contractor/Supplier shall give the Employer the requisite period of notice prior to undertaking the tests, and shall submit to the Employer a test program and procedures. **This is a Hold Point.**

12.6.2 Conductor Damage

An undamaged length of conductor shall be tensioned to approximately 20% of its nominal breaking load and the vibration damper clamp shall be installed using the recommended torque. The position of the clamp shall be marked and then removed from the conductors. No indentations in the outer strands of the conductor shall be present in the area of the clamp.

For vibration dampers used on fibre optic earthwire, to check for any degradation in the optical fibre signal strength, the above test set-up shall be reused, except that the clamp installation torque shall be twice the recommended value. The degradation of the optical fibre signal shall be measured using an optical power metre.

Using a similar test set-up to that described above a spiral vibration damper shall be installed. The position of the SVD shall be marked and then removed from the conductor. No indentations in the outer strands of the conductor shall be present in the area of contact of the SVD.

12.6.3 Clamp Slip Test

For Stockbridge Vibration Dampers Clamp Slip Test shall be performed in accordance with IEC 61897. In the case of breakaway bolts, the installation torque shall be the design value minus the tolerance mentioned in the approved drawing.

The axial grip of the Spiral Vibration Damper (SVD) shall be measured using a similar test set-up described above. A co-axial tension of 2.5 kN shall be applied to the SVD, the relative movement of the SVD shall not exceed 0.5 mm after the 2.5 kN tensile force has been applied for one minute.

12.6.4 Clamp Bolt Tightening Test

For Stockbridge Vibration Dampers Clamp Bolt Tightening Test shall be performed in accordance with IEC 61897. The bolts or nuts shall be tightened to a torque 10 % above the specified installation torque.
Clamps with breakaway bolts shall have the breakaway portion of the head removed prior to the test and shall be tightened with the specified torque value plus the tolerance mentioned in the approved drawing.

The threaded connection shall remain serviceable for any number (minimum five) of subsequent installations or removals and all components of the clamp shall be undamaged. No damage shall occur to the conductor inside the clamp.

12.6.5 Attachment of clamp to messenger cable

The test shall be performed in accordance with IEC 61897.

12.6.6 Attachment of weights to messenger cable

The test shall be performed in accordance with IEC 61897.

12.6.7 Corona

All vibration dampers, other than those used exclusively for earthwire applications shall be erected as in service (which may necessitate representation of the tower body) and subjected to a visible corona test. Corona tests shall be undertaken in accordance with the recommendations of IEC 61284. The visible corona extinction voltage shall not be less than the corona voltage mentioned in Annex 9-2. One sample shall be retained for reference purposes.

12.6.8 Vibration Damper Characteristics

This test is required to establish the characteristics of the vibration dampers used in the Damping Effectiveness test and the Fatigue test. Characteristics obtained before and after the Fatigue test shall be used as one of the acceptance criteria for the Fatigue test.

The test shall be performed in accordance with Clause no. 7.11.2 (Variant B) of IEC 61897.

12.6.9 Damping Effectiveness

12.6.9.1. This test is intended to verify that the damping system i.e. the vibration damper installed on the conductor is efficient in protecting the conductor from fatigue damage. The test shall be carried out in accordance with IEC 61897 or equivalent standards.

12.6.9.2. The same damper which has been subjected to the test in accordance with clause 12.6.8 shall be used. This test shall also be undertaken using spiral vibration dampers.

12.6.9.3. The test shall be conducted on a laboratory span with a minimum length of 30 m. The test span shall be arranged in accordance with CIGRE guides Electra No. 62 and IEEE Std. 664. The conductor shall be tensioned to 20± 1 % of its nominal breaking load.

12.6.9.4. The test shall be performed in accordance with clause no. 7.11.3.2 of IEC 61897.

12.6.10 Fatigue

12.6.10.1 The same vibration damper previously used for the vibration damper characteristics and damping effectiveness tests shall be used.

12.6.10.2 The test shall be performed in accordance with the Resonant Frequency Method of Clause 7.12 of IEC 61897. The damper shall be attached to a shaker and driven in a vertical direction for 10^7 (10 million) cycles. The minimum peak-to-peak amplitude at the damper clamp shall be equal to the conductor antinode amplitude peak-to-peak measured at the corresponding harmonic or 0.5mm.

12.6.10.3 After the fatigue test, the vibration damper shall again be subjected to the vibration damper characteristic test, to ensure that the dynamic behaviour of the vibration damper is maintained. The test shall be performed in an identical manner to that previously undertaken and the results shall be resented accordingly.

12.6.10.4 The acceptance criteria for this test, shall be in accordance with clause no. 7.12.4 of IEC 61897.

12.6.11 Sample Tests

12.6.11.1. Following tests shall be performed during Sample Test in accordance with IEC 61897:

a) Visual examination
b) Verification of dimensions, materials and mass
c) Corrosion protection tests
d) Clamp slip test
e) Breakaway bolt test (only for Conductor dampers)
f) Conductor Damage test (in accordance with clause no.12.6.2 of this specification)
g) Clamp bolt tightening test
h) Attachment of weights to messenger cable
i) Attachment of clamp to messenger cable test
j) Vibration damper characteristic test

12.6.11.2. The Supplier shall give the Employer the requisite period of notice prior to undertaking sample tests. **This is a Notification Point.**

12.6.11.3. The number of samples selected for test shall be in accordance with the following requirements, where "p" is the number of fittings to be tested, and "n" is the number of fittings produced in a batch:

- p = 4 when n ≤ 500
- p= 4 + (1.5n)/1000 when n > 500

12.6.11.4. verification of compliance with the Approved drawings and that their shape and surface finish compare satisfactorily with the corona test reference sample shall form part of the sample test. Particular attention shall be given to markings required and to the finish of surfaces which come into contact with the conductor.

12.6.11.5. Dimension of the Vibration Dampers should be within dimensional tolerance stated on Approved drawings. This verification of materials shall be carried out by inspecting the supplier's documentation relating to material specifications, certificates of conformity or other quality documentation. The total mass of the damper complete with all its components shall comply with the mass shown on the approved drawing (within given tolerances).

12.6.11.6. During the sample tests, a vibration damper characteristic test in accordance with clause no.12.6.8 shall be undertaken. The damper Power Dissipation, The damper impedance and the phase angle between the reaction force and the velocity shall be measured and plotted against the frequency over the given frequency range. The corresponding curves for the type test shall also be plotted on the same graph.

12.6.11.7. If the randomly selected samples meet the test requirements, the batch(s) shall be deemed to comply with this specification. In the event of any samples not meeting the requirements, a further set of "p" samples shall be tested. Should any further failure occur the whole batch(es) from which the samples have been selected shall be liable to rejection.

12.6.12 Galvanizing

Tests for galvanized components of vibration dampers, shall be carried out at the works to ensure compliance with the requirements of BS ISO 1461. Hot dip galvanized messenger cable wires shall be tested in accordance with the requirements specified in IEC 60888 or BS EN 10244-2. Details of the test results shall be made available to the Employer.

Certificates relating to the ingot zinc used for galvanizing shall also be made available to the Employer.

12.6.13 Test Certificates

All metallic materials used in the manufacture of vibration dampers shall be covered by test certificates stating their mechanical and chemical properties to show compliance with this specification and IEC 61897, BS EN 1559, 1676, 1706, BS EN 1562, BS EN 1563, BS EN 1561, BS EN 1774, 12844 and BS EN 1676 as appropriate. Bolts and nuts shall be covered by the appropriate test certificate in respect of the test requirements of BS 3692.

Spiral vibration dampers shall be covered by the appropriate test certificate stating their mechanical and chemical properties. Test certificates for metallic, non-metallic materials and bolt and nuts shall be made available to the Employer. Test records, covering Type and Sample tests shall be made available to the Employer.

12.6.14 Certificate of Conformity

Copies of the following certificates/records shall also be forwarded:

a) Metallic and non-metallic material test certificates
b) Bolt and nut test certificates
c) Galvanizing test records
d) Ingot zinc certificate

Annex 12-1: Vibration Dampers Types & Uses

Annex 12-1(1): 400kV Line (Overland Portion) – Not applicable

Parameters	Conductor Type		
	Phase	Earthwire	OPGW
Conductor designation	ACSR Finch	ACSR Dorking	ACSR Dorking Equivalent OPGW
Conductor material	ACSR	ACSR	AS
Armour rods fitted	YES	NO	YES
Basic span (m)	as per Tower Section	as per Tower Section	as per Tower Section
Everyday temperature (°C)	as per Section 2. Technical Particulars	as per Section 2. Technical Particulars	as per Section 2. Technical Particulars
Everyday tension (kN)	as per Section 8. Tower	as per Section 8. Tower	as per Section 8. Tower
Vibration damper type	4R Stockbridge vibration damper	4R Stockbridge vibration damper	4R Stockbridge vibration damper

Note: Requirement of vibration damper for bundle conductor shall be subject to the outcome of damping study during execution of Contract.

Annex 12-1(2): 400kV Line (River Crossing Portion) – Not applicable

Parameters	Conductor Type		
	Phase	Earthwire	OPGW
Conductor designation	630 A3/S3A AACSR	19x3.67	19x3.67 Earthwire Equivalent OPGW
Conductor material	AACSR	AS	AS
Armour rods fitted	YES	NO	YES
Basic span (m)	as per Tower Section	as per Tower Section	as per Tower Section
Everyday temperature (°C)	as per Section 2. Technical Particulars	as per Section 2. Technical Particulars	as per Section 2. Technical Particulars
Everyday tension (kN)	Sag equalized to 90% of conductor sag	Sag equalized to 90% of conductor sag	Sag equalized to 90% of conductor sag
Vibration damper type	4R Stockbridge vibration damper	4R Stockbridge vibration damper	4R Stockbridge vibration damper

Note: Requirement of vibration damper for bundle conductor shall be subject to the outcome of damping study during execution of Contract.

Annex 12-1(3): 230 kV Line – Overland Portion

Parameters	Conductor Type		
	Phase	Earthwire	OPGW
Conductor designation	Mallard.	7x4	Earhwire equivalent
Conductor material	ACSR	GS	AS
Armour rods fitted	YES	NO	YES
Basic span (m)	380	380	380
Everyday temperature (°C)	as per Section 2. Technical Particulars	as per Section 2. Technical Particulars	as per Section 2. Technical Particulars
Everyday tension (kN)	as per Section 8. Tower	as per Section 8. Tower	as per Section 8. Tower
Vibration damper type	4R Stockbridge vibration damper	4R Stockbridge vibration damper	4R Stockbridge vibration damper

Note: Requirement of vibration damper for bundle conductor shall be subject to the outcome of damping study during execution of Contract.

Annex 12-1(4): 230 kV Line – River Crossing Portion– Not applicable

Parameters	Conductor Type		
	Phase	Earthwire	OPGW
Conductor designation	Mallard equal dia.	19x3.67	19x3.67 equiv. OPGW
Conductor material	ACCC	ACS	AS
Armour rods fitted	YES	YES	YES
Basic span (m)	800	800	800
Everyday temperature (°C)	as per Section 2. Technical Particulars	as per Section 2. Technical Particulars	as per Section 2. Technical Particulars
Everyday tension (kN)	as per Section 8. Tower	as per Section 8. Tower	as per Section 8. Tower
Vibration damper type	4R Stockbridge vibration damper	4R Stockbridge vibration damper	4R Stockbridge vibration damper

Note: Requirement of vibration damper for bundle conductor shall be subject to the outcome of damping study during execution of Contract.

Annex 12-1(5): 132 kV Line [Overland Portion]

Parameters	Conductor Type		
	Phase	OPGW	Earthwire
Conductor designation	Grosbeak	To match 7 x 3.25 steel earthwire	7 x 3.25 steel earthwire
Conductor material	ACSR	AS	GS
Armour rods fitted	YES	YES	-
Basic span (m)	as per Section 8. Tower	as per Section 8. Tower	as per Section 8. Tower
Everyday temperature (°C)	as per Section 2. Technical Particulars	as per Section 2. Technical Particulars	as per Section 2. Technical Particulars
Everyday tension (kN)	as per Section 8. Tower	as per Section 8. Tower	as per Section 8. Tower
Vibration damper Type	4R Stockbridge vibration damper	4R Stockbridge vibration damper	4R Stockbridge vibration damper

Annex 12-1(6): 132 kV Line [River Crossing Portion] – Not applicable

Parameters	Conductor Types	
	Phase	OPGW
Conductor Designation	ACSR Mallard	To match with 7x4.25 steel earthwire
Conductor Material	ACSR	-
Armour Rods Fitted	YES	YES
Standard Span (m)	As per site condition	As per site condition
Everyday Temperature (°C) Everyday Tension (kN)	30 As per tower section	30 Sag Equalized to 90% of conductor sag.
Vibration Damper Type	Stockbridge	Stockbridge

Annex 12-1(7): 132 kV Line (ACSR Finch) – Not applicable

Parameters	Conductor Type	
	Phase	OPGW
Conductor designation	Finch	To match 7 x 3.25 steel earthwire
Conductor material	ACSR	AS
Armour rods fitted	YES	YES
Basic span (m)	as per Tower Section	as per Tower Section
Everyday temperature (°C)	as per Section 2. Technical Particulars	as per Section 2. Technical Particulars
Everyday tension (kN)	as per Section 8. Tower	Sag matched to earthwire
Vibration damper Type	Stockbridge	Stockbridge

Annex 12-2: Engineering Documents to be submitted by Contractor

Clause Ref.	Document Description	Comments
12.4.1	Vibration dampers - contract drawings	
12.4.3	Installation procedures	
12.6.1	Type test programme and procedures	
12.6.1	Vibration dampers - type test certificates	
12.6.10	Galvanising test results	
12.6.10	Ingot zinc certificates	
12.6.11	Metallic material test certificates	
12.6.11	Bolts and nut material type test certificates	
12.6.11	Vibration dampers - type test results	
12.6.11	Vibration dampers - sample test results	
12.6.12	Certificate of conformity	

Annex 12-3: Notification and Hold Points

Clause Ref.	Notification Points	Hold Points
12.4.1		Contract drawings
12.6.1		Vibration dampers- type tests
12.6.9	Vibration dampers-sample tests	

Annex 12-4: Reference Standards

The reference standards and other documents referred to in this section of the specifications are listed below:

IEC 61284:	Overhead lines - Requirements and tests for fittings
IEC 61897:	Overhead lines - Requirements and tests for Stockbridge dampers
BS EN 10244-2:	Testing zinc coatings on steel wire for quality requirements
BS EN ISO 1461:	Specification for hot-dipped galvanising coating on iron and steel articles
BS EN 1774:	Specification for zinc alloys for die castings and zinc alloy die castings BS EN 12844
BS EN 1561:	Specification for flake graphite cast iron
BS EN 1559:	Specification for aluminium and aluminium alloy ingots and castings for general engineering purposes
BS EN 1676; BS EN 1706; BS EN 1563:	Specification for spherodical graphite cast iron
BS EN 1179:	Specification for ingot zinc
BS 3692:	Specification for ISO Metric hexagon bolts, screws and nuts
BS 4320:	Specification for metal washers for general engineering purposes. Metric series.
BS 4464:	Specification for Spring Washers for general engineering and automobile purposes. Metric series.
BS EN 1562:	Specification for Malleable cast iron
BS EN 1676:	Aluminium and aluminium alloys - Alloyed ingots for remelting
IEEE Trans Vol. PAS-85 (1966) No. 1	"Standardisation of Conductor Vibration Measurement"
IEEE Std. 664:	"Guide to Laboratory Measurement of the Power Dissipation Characteristics for Aeolian Vibration Dampers for Single Conductors".

13. Spacer Dampers

13.1 Scope

13.1.1 General

The following **definitions** are used throughout the specification:

'Rigid bolted spacers' for jumper and downlead applications, comprising bolted aluminium clamps which are rigidly connected to each other, both electrically and mechanically.

"Spacer-dampers" suitable for in-span application to control both aeolian vibration and sub-conductor oscillation.

13.1.2 Types & Uses

Reference shall be made to **Annex 13-1** for details of the specified requirements.

13.2 Design

13.2.1. All spacers and spacer dampers shall be designed so as to:

a. Avoid damaging or cause corrosion to the conductor or individual strands under all service conditions;
b. Maintain the sub-conductor spacing at spacer/spacer damper locations within the prescribed limits under all conditions of service apart from when fault currents are flowing. In sub- spans between spacer/spacer dampers the spacer/spacer dampers shall prevent physical contact between sub-conductors, but not necessarily during the passage of fault currents when the possibility of contact is accepted, provided that the specified spacing is restored immediately following fault clearance;
c. Withstand the mechanical loads relevant to the installation, service (including wind induced conductor movements) and maintenance conditions, the design service current including short circuit effects, the service temperature and environmental effects;
d. Be free from visible and audible corona discharge and radio interference at the voltage levels specified;
e. Minimize the number of parts and the possibility of incorrect assembly and installation;
f. Ensure that individual components are secured against becoming loose in service, and all threaded fasteners are locked;
g. From materials which have sufficient strength, ductility and environmental resistance to withstand the static and dynamic loading.

13.2.2. The determination of the forces arising from the fault currents shall be based on the relationship given in IEEE Paper 31TP 65-707.

13.2.3. Spacer and spacer damper clamps shall be designed to ensure that they are capable of maintaining their effectiveness for the service life of the unit under the action of conductor tension variations, temperature variations and relative conductor movement with change in performance relative to time no greater than the prescribed range. The system must provide for resilient accommodation of change in the conductor diameter and chance in the conditions of the clamp material. During installation the interface between the clamp and the conductor shall be filled with grease to exclude moisture and this fact shall be taken into account in the design, except those with elastomer-lined clamps.

13.2.4. Spacer and spacer damper clamps shall be designed to ensure that it is not possible for the unit to be removed from the conductor, without initially undoing the clamp bolt.

13.2.5. The clamp bolt shall be sufficiently modified to prevent them being completely removed inadvertently. Any nut shall be captive.

13.2.6. No audible noise shall be induced by the wind under any weather conditions.

13.2.7. When installed in accordance with the Supplier's recommendation the spacer dampers shall achieve the following performance criteria such as to adequately damp both aeolian and sub-span modes of oscillation to prevent sub-conductor clashing, fretting or fatigue, under all applicable frequencies:

a. The conductor bending strains in the surface of the outer wires, determined in accordance with the CIGRE/IEEE recommendations; shall not exceed 300 microstrains peak-to-peak at the spacer damper clamp and at an adjacent suspension clamps or tension joints (dead ends). This requirement shall be met for all frequencies up to f = 1480/d Hz, where d is the conductor diameter in mm;
b. The system damping performance as measured by the logarithmic decrement of the fundamental wind induced anti-phase modes of the conductors shall not be less than 0.5.

Where the log decrement $d = [\ln(A_o/A_n)] / n$

A_o = peak to peak amplitude;
A_n = peak to peak amplitude at nth cycle.

13.2.8. Spacer dampers shall permit the following relative movements between sub conductors without damage to the unit or to the conductor:

a. Longitudinal movement of at least ± 25 mm;
b. Vertical movement of at least 20 degrees;
c. Conical movement of at least 20 degrees;

13.2.9. Horizontal movement perpendicular to the conductor of at least ± the diameter of the conductor.

13.2.10. The resistance between each conductor and the central frame shall be greater than 1 MΩ when the voltage between the frame and the conductor is 100 Volt, 50 Hz.

13.3 Materials

13.3.1. Materials used in the manufacture of spacers and spacer dampers shall be of:

a. Adequate strength for the intended application, service life requirements (including mechanical loads, vibration, electrical currents and environmental effects) and free from defects which would affect the performance of the fitting;
b. Shall not be liable to intergranular or stress corrosion,
c. The materials of compression components shall be capable of withstanding the cold working of the material due to compression;
d. Compatible with the conductor material, such that there can be no deleterious effects, on the conductor, spacer or spacer damper resulting from their use;
e. The material shall not be adversely affected in the long term by a coating applied for corrosion protection.

13.3.2. Spacer and spacer damper principal main components including clamps shall be made from a suitable grade of aluminium or aluminium alloy complying with the requirements of BS EN 1559, 1676, 1706 and/or BS EN 1676.

13.3.3. Bolts and nuts shall be ISO Metric Precision Hexagon to BS 3692. Metal washers shall be ISO Metric to BS 4320 'Bright series' and spring washers shall be ISO Metric to BS 4464.

13.3.4. If shear-head type bolts are used they shall be clearly marked, so after the correct torque has been applied the installed bolt may be clearly identifiable from the ground.

13.3.5. Non-metallic materials used shall have:

a. A good resistance to ageing;
b. Capable of withstanding service temperatures without detrimental changes of properties;
c. Adequate resistance to the effects of nitrogen oxides, ozone, ultra-violet radiation and air pollution over the whole range of service temperatures;
d. The resistance (or conductivity) of the various components shall be selected to ensure that, when correctly installed, potential differences between metallic components do not cause damaging discharges, and any current flowing between sub-conductors does not degrade any spacer or spacer damper materials.

13.4 Workmanship

13.4.1 General

The dimensions of the spacer or spacer damper shall be shown on the contract drawings, together with material types and grades, protective treatment and any other pertinent information. Contract drawings shall be submitted to the Employer. **This is a Hold Point.** All spacers and spacer dampers shall be free from sharp edges, burrs and sward.

13.4.2 Identification

All spacers and spacer dampers shall be marked to ensure a system of traceability. Where practicable and unless otherwise agreed between the Engineer and the manufacturer, spacers and spacer dampers shall be clearly marked with 3mm high characters as follows:

a. Identification of spacer, spacer damper (reference number);
b. Makers identification;
c. Date of manufacture (month and year);
d. Conductor diameter or designation;
e. Conductor separation;
f. Clamp bolt installation torque - if appropriate;
g. Compression die size - if appropriate;
h. Length to be compressed - if appropriate;
i. Orientation of the spacer, spacer damper (as indicated by Up Arrows or by "Top"), shall also be indicated.

13.4.3 Installation Criteria

The Contractor shall be responsible for determining:

a. the exact number of spacer dampers required for each individual phase in each span of the transmission line,
b. distance of the spacer damper from suspension clamp or mouth of tension joint (dead end),
c. in-span separation,
d. Clamp bolt installation torque.

For spacers or spacer dampers with elastomer-lined clamps, details of any special tools required for installation shall be specified.

Where there is a mid-span joint or repair sleeve on a conductor, the adjacent spacer damper must not be closer than 2 m, or further away than 12 m from the mid-span joint or repair sleeve. If possible, this should be achieved using the correct configuration of spacer damper positions. This configuration can be used in reverse by taking the measurement from the other support. Where the configuration given does not allow a spacer damper to be in the correct juxtaposition with the mid-span joint or repair sleeve an additional spacer damper should be fitted.

13.5 Protective Treatment

Spacers and spacer dampers shall either be inherently resistant to atmospheric corrosion or suitably protected against corrosion, such as may occur in transit, storage and in service. All ferrous parts which will be exposed to the atmosphere in service shall be protected by hot-dipped galvanizing to comply with the requirements of BS ISO 1461. All manufacturing processes shall be completed prior to galvanizing.

The ingot zinc used for galvanizing shall comply with the requirements of BS EN 1179.

All external threads shall be cut or rolled before hot-dipped galvanizing. Nuts to be galvanized shall be subsequently tapped 0.4mm oversize and threads oiled.

13.6 Quality Control

13.6.1 General

13.6.1.1 Type and sample tests shall be undertaken on spacers and spacer dampers in accordance with requirements of this specification, type tests specified in clauses 13.6.2 to 13.6.13 shall be undertaken on a minimum of three samples, which shall be identical in all essential details with the spacers or spacer dampers to be supplied.

13.6.1.2 Contract drawings previously submitted to the Employer shall be available at the time of testing.

13.6.1.3 The Contractor/Supplier shall give the Employer the requisite period of notice prior to undertaking the tests, and shall submit to the Employer a test programme and procedures. **This is a Hold Point.**

13.6.2 Conductor Damage

An undamaged length of conductor shall be tensioned to approximately 20% of its nominal breaking load and the spacer or spacer damper clamp shall be installed using the recommended torque. The position of the clamp shall be marked and then removed from the conductor. No indentations in the outer strands of the conductor shall be present in the area of the clamp.

13.6.3 Clamp Grip

13.6.3.1. The axial grip of the clamp shall be measured on a greased portion of conductor, tensioned at 20% of its nominal breaking load. The end fixings of the tensioned conductor shall be such as to prevent bird-caging or slipping of the individual strands.

13.6.3.2. With the spacer or spacer damper clamped at the recommended torque, a co-axial force of 5kN (or 1kN for elastomer-lined clamps) shall be applied to the clamp. The relative movement of the clamp shall not exceed 0.5mm (1.0mm for elastomer-lined clamps) after the 5kN has been held for one minute. The force shall then be increased until the manufacturer's design value has been reached, no further movement should occur.

13.6.3.3. With a test set-up identical to that described above bolted spacers or spacer damper clamp bolts shall be tightened to twice the recommended installation torque. Where aluminium alloy shear head clamp bolts are used, they shall be replaced by high tensile steel bolts for this test. However, the aluminium alloy shear head clamp bolts shall be capable of withstanding 1.5 times the recommended installation torque. No damage shall occur to the clamp or its fastener at less than the defined torque.

13.6.4 Visible Corona

Corona tests on spacers or spacer dampers shall be undertaken in accordance with the recommendations of IEC 61284.

The visible corona extinction voltage shall not be less than the corona voltage mentioned in Annex 9-2. One sample shall be kept for reference purposes.

13.6.5 Strength (Spacer Dampers Only)

The loads arising from the fault conditions determined in accordance with Clause 13.2.2 shall be applied simultaneously towards the geometric centre of the unit. The distance between the arms shall be measured before and after the test. On completion of the load application and relaxation the spacer damper shall be hand worked for three cycles and left for one minute before re-measuring. The difference between measurements before and after the tests shall be less than 3% of the original measurement.

13.6.6 Movement (Spacer Dampers Only)

Movement tests shall be undertaken to demonstrate compliance of the spacer damper to the requirements of Clause 13.2.8 without damage to the unit or conductor. The conductor may be represented by tubes or rods of the same diameter, one of which shall be fixed in position.

13.6.7 Log Decrement (Spacer Dampers Only)

The log decrement of the system shall be determined using the criteria specified in Clause 13.2.7 (b).

13.6.8 Damping/Flexible Element (Spacer Dampers Only)

The damping/flexible element shall be stressed to its end stops for 10^7 cycles at a simulated frequency of 1-5 Hz. Prior to the start of the test the damping/flexible element shall be subject to accelerated environmental conditions similar to those specified in IEC 60507 Clause 8.4.1 artificial pollution tests (salt fog method).

Measurement of the damping/flexible element stiffness shall be taken before and after the test, and the stiffness of the element after the test shall not be less than 75% of an untested element.

13.6.9 Longitudinal (Spacer Dampers Only)

With one arm rigidly fixed to a parallel test rod of similar diameter to the conductor and with the remaining arms free to move, the spacer damper shall be subject to 10^6 Cycles without deterioration or damage of the unit or individual components, with the greater of the two longitudinal movements defined below:

The free arms shall be moved either:

e. 75% of the permitted longitudinal movement as specified, or
f. ± 12.5mm about the longitudinal centre line of the unit.

13.6.10 Sub-conductor Oscillation (Spacer Damper Only)

One arm of the spacer damper shall be installed at the recommended torque on a greased portion of conductor, tensioned at 20% of its normal breaking load. The other arm forming a horizontal pair shall be rigidly attached to a horizontal tube simulating the other sub-conductor. The tube shall be subjected to oscillations perpendicular to the conductor, with a vertical displacement sufficient to ensure the stop limits are engaged, at a frequency of 1 - 5 Hz for 10^7 cycles. At the end of the test there shall be no deterioration to the unit or damage to the conductor.

13.6.11 Aeolian Vibration (Spacer Dampers Only)

With a test-rig identical to that described above, the rod shall be subjected to a vibration force sufficient to produce a bending strain of 300 micro-strains peak-to-peak in the outer strands of the conductor determined in accordance with the CIGRE / IEEE recommendations for 10^8 cycles. At the end of the test there shall be no deterioration to the unit or damage to the conductor.

13.6.12 Elastomeric Bushes Resistance (Spacer Dampers Only)

The resistance of the elastomeric bush (es) between each conductor and the spacer frames shall be determined by application of 100 V_{rms} (±10%) 50 Hz and the value determined from V_{rms}/I_{rms} shall be in accordance with requirements of Clause 13.2.10.

13.6.13 Jumper Bonding Spacer Resistance

Rigid compression jumper bonding spacers shall be installed in sample lengths of conductor and the resistance measured using a digital micro-ohm-meter, between two points on the conductor on either side of, and immediately adjacent to the spacer and shall not exceed the equivalent length of conductor. The test shall be made with direct current, the current connections shall be at a distance from the spacer of not less than 50 times the diameter of the conductor.

13.6.14 Sample Tests

13.6.14.1. The clamp grip, strength and the electrical resistance of the bushes type tests shall be repeated as sample tests. In addition, verification of compliance with the 'contract' drawings and surface finish compatible with the reference spacer or spacer damper shall also form part of the sample test. In addition to the tests mentioned above, breakaway bolt test shall be performed as per IEC 61854.

13.6.14.2. The Contractor/Supplier shall give the Employer the requisite period of notice prior to undertaking sample tests. **This is a Notification Point.**

13.6.14.3. The number of samples selected for test shall be in accordance with the following requirements, where 'p' is the number of fittings to be tested, and 'n' is the number of fittings produced in a batch:

$p = 4$ when, $n \leq 500$
$p = 4 + 1.5\ n/\ 1000$ when, $n > 500$

13.6.14.4. If the randomly selected samples meet the test requirements, the batch(s) shall be deemed to comply with this specification. In the event of any sample not meeting this requirement, a further set of 'p' samples shall be tested. Should any further failure occur the whole batch(s) from which the samples have been selected shall be liable to rejection.

13.6.15 Galvanising

Tests for galvanised components of spacers and spacer dampers shall be carried out at the works, to ensure compliance with the requirements of BS ISO 1461. Details of the test results shall be made available to the Employer.

Certificates relating to ingot zinc used for galvanising shall also be made available to the Employer.

13.6.16 Tests Certificates

13.6.16.1. All metallic materials used in the manufacture of spacers and spacer dampers shall be covered by test certificates stating their mechanical and chemical properties to show compliance with this specification and BS EN 1559, 1676, 1706 and/or BS EN 1676.

13.6.16.2. Bolts and nuts shall be covered by the appropriate test certificate in respect of the test requirements of BS 3692.

13.6.16.3. Elastomeric bushes shall be covered by the appropriate test certificate stating their mechanical and chemical properties.

13.6.16.4. Test certificates for metallic, non-metallic, bolts and nuts shall be made available to the Employer.

13.6.16.5. Test records covering Type and Sample tests shall be made available to the Employer.

13.6.17 Certificate of Conformity

Copies of the following certificates/records shall also be forwarded:

g. Metallic, non-metallic material test certificates;
h. Bolt and nut test certificates-,
i. Galvanizing test records;
j. The ingot zinc certificate.

Annex 13-1: Spacers & Spacer Dampers - Types and Uses: 400kV Overland Portion – Not applicable

Parameter		Spacer	Spacer Damper
Conductor Designation		ACSR Finch	ACSR Finch
Conductor Material		ACSR	ACSR
Basic Span	(m)	-	As per Tower Section
Maximum Single Span	(m)	-	As per Tower Section
Everyday Temperature	(°C)	-	As per Section 2. Technical Particulars
Everyday Tension	(kN)	-	As per Tower/Conductor Section
Sub-Conductor Configuration		Quad	Quad
Sub-Conductor Spacing (centre to centre)	(mm)	450x450	450x450
Tolerance on sagging sub-conductors	(mm)	-	± 40
Spacer damper to be fitted adjacent to tension joint (dead-end)Clause13.4.3		-	Yes
Nominal System Voltage	(kV)	400	400
Short Circuit Condition:			
Current	(kA)	31.5	31.5
Duration	(s)	1	1

Note: Spacers are only required to be fitted to jumper loops and downleads.

Annex 13-2: Spacers & Spacer Dampers - Types and Uses: 400kV River Crossing Portion– Not applicable

Parameter		Spacer	Spacer Damper
Conductor Designation		630 A3/S3A AACSR	630 A3/S3A AACSR
Conductor Material		AACSR	AACSR
Basic Span	(m)	-	As per Tower Section
Maximum Single Span	(m)	-	As per Tower Section
Everyday Temperature	(°C)	-	As per Section 2. Technical Particulars
Everyday Tension	(kN)	-	As per Tower/Conductor Section
Sub-Conductor Configuration		Quad	Quad
Sub-Conductor Spacing (centre to centre)	(mm)	450	450
Tolerance on sagging sub-conductors	(mm)	-	± 40
Spacer damper to be fitted adjacent to tension joint(dead-end) Clause13.4.3		-	Yes
Nominal System Voltage	(kV)	400	400
Short Circuit Condition:			
Current	(kA)	31.5	31.5
Duration	(s)	1	1

Note: Spacers are only required to be fitted to jumper loops and downleads.

Annex 13-3: Spacers & Spacer Dampers - Types and Uses: 230kV – Overland Portion

Parameter		Spacer	Spacer Damper
Conductor Designation		ACSR Mallard.	ACSR Mallard equal dia.
Conductor Material		ACSR	ACCC
Basic Span	(m)	-	380
Maximum Single Span	(m)	-	-
Everyday Temperature	(°C)	-	As per Section 2. Technical Particulars
Everyday Tension	(kN)	-	As per Tower/Conductor Section
Sub-Conductor Configuration		Twin	Twin
Sub-Conductor Spacing	(mm)	450	450
Tolerance on sagging sub-conductors	(mm)	-	± 40
Spacer damper to be fitted adjacent to tension joint(dead-end)Clause13.4.3		-	Yes
Nominal System Voltage	(kV)	230	230
Short Circuit Condition:			
Current	(kA)	31.5	31.5
Duration	(s)	1	1

Note: Spacers are only required to be fitted to jumper loops and downleads.

Annex 13-4: Spacers & Spacer Dampers - Types and Uses: 230kV – River Crossing Portion– Not applicable

Parameter		Spacer	Spacer Damper
Conductor Designation		ACSR Mallard equal dia.	ACSR Mallard equal dia.
Conductor Material		ACCC	ACCC
Basic Span	(m)	-	800
Maximum Single Span	(m)	-	800
Everyday Temperature	(°C)	-	As per Section 2. Technical Particulars
Everyday Tension	(kN)	-	As per Tower/Conductor Section
Sub-Conductor Configuration		Twin	Twin
Sub-Conductor Spacing	(mm)	450	450
Tolerance on sagging sub-conductors	(mm)	-	± 40
Spacer damper to be fitted adjacent to tension joint(dead-end)Clause13.4.3		-	Yes
Nominal System Voltage	(kV)	230	230
Short Circuit Condition:			
Current	(kA)	31.5	31.5
Duration	(s)	1	1

Note: Spacers are only required to be fitted to jumper loops and downleads.

Annex 13-4: Engineering Documents to be Submitted by Contractor

Clause Reference	Document Description	Comments
13.4.1	Spacer, spacer damper - contract drawings	
13.4.3	Installation procedures	
13.6.1	Type test-programme and procedures	
13.6.1	Spacer, spacer damper - type test certificates	
13.6.15	Galvanising test results	
13.6.15	Ingot zinc certificates	
13.6.16	Metallic, non-metallic material test certificate	
13.6.16	Bolts & nuts material test certificates	
13.6.16	Spacer, spacer damper - type test results	
13.6.16	Spacer, spacer damper - sample test results	
13.6.17	Certificate of conformity	

Annex 13-5: Notification and Hold Points

Clause Reference	Notification Points	Hold Points
13.4.1		Contract drawings
13.6.1		Spacer, spacer dampers-type tests.
13.6.14	Spacer, spacer dampers-sample tests	

Annex 13-6: Reference Standards

Thereferencestandardsandotherdocumentsreferredtointhissectionofthespecificationsarelistedbelow:

IEC 60507:	Artificial pollution tests on high-voltage insulators to be used on ac system.
IEC 61854:	Requirements and tests for spacers
BS ISO 1461:	Specification for hot-dipped galvanising coatings on iron and steel articles
BS EN 1559:	Specification for Aluminium and aluminium alloy ingots and castings for general engineering purposes
BS EN 1676; BS EN 1706; BS 3692:	Specification for ISO Metric Precision Hexagon bolts, screws and nuts
BS 4320:	Specification for Metal washers for general engineering purposes. Metric series
BS 4464:	Specification for Spring washers for general engineering and automobile purposes. Metric series
BS EN 1676:	Aluminium and aluminium alloys - Alloyed ingots for remelting.
BS EN 1179:	Specification for zinc and zinc alloys
IEEE:	Trans Vol PAS -85 (1966) No. 1 "Standardisation of Conductor Vibration Measurements".
IEEE:	Paper 31 TP 65-707 "An Investigation of the Forces of Bundle Conductor spacers under Fault Conditions

14. OPGW and Optical Fibre Cable & Fittings

14.1 Scope

14.1.1 General

This section of the specification covers optical fibre cable suitable for incorporation into the earthwire (OPGW), associated fittings and non-metallic underground fibre optic cable.

14.1.2 Types and Uses

For details of the specified requirements reference shall be made to **Annexes 14-1 to 14-3**.

14.2 Design

14.2.1 Reliability

The overall system design of the fibre optic system shall meet the following minimum requirements:

a. Single failure or degradation in any optical fibre not more than one per year averaged over five years;
b. Failures or degradations affecting more than one optical fibre, not more than one in ten years;
c. Increase in optical system transmission attenuation due to accumulated ageing and other effects at the end of five years not more than 0.05 dB/km.

14.2.2 Fibre Optic Earthwire (OPGW)

14.2.2.1. The fibre optic earthwire to be supplied shall be suitable for installation on transmission lines, and shall be supplied complete with all necessary fittings and optical joint boxes. The earthwire, fittings and optical joint boxes shall be type approved.

14.2.2.2. The fibre optic earthwire shall comprise an optical sub-unit containing optical fibres, over which shall be laid aluminium, aluminium alloy or aluminium coated steel strands. Reference should be made to Section 11 for pertinent details of the overall earthwire.

14.2.2.3. The optical sub-unit shall withstand the temperature rise associated with the specified lightning fault current flowing in the earthwire without damage. The fibre optic earthwire shall be manufactured in continuous lengths of not less than 3 km.

14.2.3 Optical Fibres

14.2.3.1. Optical fibres shall be single mode fibre. The fibres shall be coded for ready identification at each end. Single mode fibres shall conform to ITU-T G652 or to IEC 60793-2-B1 and **Annex 14-2**.

14.2.3.2. The optical fibre coating material shall be mechanically strippable. The optical fibres shall be capable of being joined by fusion splicing techniques.

14.2.3.3. There shall be no measurable long term or short term optical attenuation change due to the temperature rise associated with a fault current flowing in an earthwire, or a lightning strike on the earthwire.

14.2.3.4. The optical fibres shall not be subjected to any critical stresses when the cable is at its maximum system loading, reference **Annex 11-3**.

14.2.3.5. After finalisation of the drum lengths, the Contractor/Supplier shall submit calculations for the expected overall attenuation and dispersion. **This is a Hold Point.** This will be compared with the actual values measured after a completion of the installation.

14.2.4 OPGW Fittings

14.2.4.1. The fibre optic earthwire shall be used with approved conductor fittings in accordance with sections 10 and 12 of the specifications. The application of these fittings shall not damage the earthwire or the fibres, either mechanically or optically.

14.2.4.2. At each support, a bypass device shall be provided to guide the cable around the earthwire fittings associated with the support.

14.2.4.3. Earthwire bonds similar to those specified in Section 10 of the specification shall be provided.

14.2.4.4. The cable run from the earthwire to the splice enclosure shall be secured to the support and suitable protection shall be provided to prevent damage from shotgun attack or other accidental means.

14.2.5 Optical Joint Boxes

14.2.5.1. Optical joint boxes shall be provided to protect the splice joints of optical fibres, either when individual lengths of fibre optic OPGW, are jointed, or between the fibre optic earthwire and the underground fibre optic cable. The optical joint boxes shall protect the splice joint from both mechanical and environmental damage.

14.2.5.2. The optical joint boxes shall preferably be of hood/dome type with single end plate in bottom and shall be fitted to the support immediately above the anti-climbing device.

14.2.5.3. The joint boxes shall consist of an external steel or die cast aluminium housing and provide protection to IEC 60529 IP447, and an internal die cast aluminium or high impact plastic ABS box to IEC 60529 IP54.

14.2.5.4. The external housing shall be designed so that rain water is directed away from the door, and there shall be no water ingress when the door is opened.

14.2.5.5. The door of the box shall be fitted with captive hinges and shall be fastened shut by screw fixings. A hasp shall be provided on the door capable of taking a 10mm padlock.

14.2.5.6. The bottom of the box shall be fitted with two gland plates, each gland plate shall have two entry points. The gland plates shall be interchangeable, one style shall be used for fibre optic earthwire, the other for underground fibre optic cable. The joint boxes shall be supplied complete with all fittings to secure and seal the cable in the gland plates or blank the unused spigots. Cable cleats to secure the fibre optic OPGW or underground cable shall be fitted inside the box. The cleats shall not have a detrimental effect on the performance of the optical fibres when tightened to the recommended torque.

14.2.5.7. The top and bottom of the joint box shall be vented, and the vents provided with vermin shields.

14.2.5.8. An M12 earthing boss complete with an M12 galvanised nut and lock washers shall be provided on the outside of the box.

14.2.5.9. The interior box shall be mounted on brackets inside the external housing and shall be capable of easy removal, complete with the optical fibre tails. The seal around the box shall be capable of withstanding specified temperatures.

14.2.5.10. The box shall be supplied complete with internal splice cassettes to accommodate the required number of splices. Glands shall be fitted to accommodate either the fibre optic OPGW, or underground fibre optic cable.

14.2.6 Fixing Clamps

A bolted clamping system shall be used to attach the OPGW to the inside of the support without drilling or modifications to the support steelwork. The clamping system shall be capable of use with galvanised steel angle sections varying between 40 and 200 mm wide and accommodating either single, double or multiple lengths of OPGW.

The attachment clamps shall be capable of being attached and detached from the support, without affecting the OPGW.

14.2.7 Non-Metallic Underground Fibre Optic Cable

The fibre optic cable shall be circular in cross section and shall be designed so that any cable strain is not directly imported on the optical fibres. The cables shall not include any metallic components, to prevent high induced voltages when used in switching or substation compounds.

Optical fibres shall be in accordance with chapter14.2.3 and shall match the OPGW, fibres in type and colour.

14.3 Materials

14.3.1 Fibre Optic Earthwire

External aluminium, aluminium alloy or aluminium coated steel strands shall be in accordance with the requirements of Section 11 of the specification. OPGW of dissimilar materials such as stainless steel tube with aluminium-clad steel wire strands are not allowed.

14.3.2 Optical Joint Boxes

Optical joint boxes shall be made from either a suitable grade of aluminium alloy complying with the requirement of BS EN 1559, 1676, 1706 and/or BS EN 1676, or steel complying with requirements of BS 3100.

14.3.3 Fixing Clamps

Fixing clamps shall be made from a suitable grade of aluminium alloy comprising with the requirements of BS EN 1559, 1676, 1706 and/or BS EN 1676. Bolt quality shall be grade 4.6 according to ISO 898-1. Bolts and nuts shall be ISO Metric Black Hexagon to BS 4190, and shall unless otherwise specified be threaded ISO Metric Coarse Pitch to BS 3643: Part 2, Tolerance Class 7h/8 g.

14.4 Workmanship

14.4.1 Contract Drawings

Contract drawings for fixing clamps and optical joint boxes shall in addition to the dimension show material types and grades, protective treatment and any other pertinent information. Design drawings shall be submitted to the Employer for approval. **This is a Hold Point.**

14.5 Protective Treatment

14.5.1 Fibre Optic Earthwire

Where two layers of wire strands are provided over the optical sub-unit, the external surface of the optical sub-unit and the inner strand layer shall be greased, using an approved conductor grease (Ref. Section 11 of the Specification).

14.5.2 Ingress of Moisture

The cable shall be capped before shipment to prevent the ingress of water.

14.5.3 Optical Joint Boxes

Optical joint boxes (steel exterior housings) shall be hot dipped galvanised after manufacture to meet the requirements of BS ISO 1461. The boxes shall be sufficiently rigid so that there is no distortion of either the box or its door after galvanising.

14.6 Installation

14.6.1 General

14.6.1.1 The supplier of the OPGW will be responsible for the supervision of installation by the Contractor, to ensure that overall system reliability requirements are met. To ensure that this is undertaken, the supplier will provide the services of a suitably qualified/experienced installation supervisor, who shall supervise the installation of the Works and shall advise the Engineer and the Contractor in matters of methods procedures and precautions to be followed and will be responsible for all matters pertaining to the quality of the installation. The supplier's installation supervisor shall make at least four visits of 2 (two) weeks each during progress of OPGW installation work for the purpose.

14.6.1.2 The Contractor shall provide the Employer with a method statement giving sequential details of the stripping procedure and the optical fibre jointing (splicing) procedure. The method statement shall take full cognisance of the manufacturer's installation instructions.

14.6.1.3 The method statement shall be submitted to the Employer for acceptance the requisite period prior to stringing or optical fibre jointing commences. **This a Hold Point.**

14.6.2 Workmanship

The Contractor shall ensure that the fibre optic cables are not strained or damaged either mechanically or optically during stringing and/or jointing. If necessary the Contractor shall demonstrate the suitability of his proposed method, including the choice of running blocks prior to the commencement of stringing operations.

14.6.3 Optical Fibre Joints

Optical fibre joints either in the OPGW, or between the OPGW, and the non-metallic underground fibre optic able shall be housed in optical joint boxes. The joint boxes shall be located immediately above the anti-climbing device for convenient access by technical personnel. All joint boxes shall be earthed to the support steelwork using approved multi-wire/multi-strand flexible aluminium earthing bonds.

14.7 Quality Control

14.7.1 General

Type, sample and routine tests shall be undertaken on OPGW, their associated fittings, non-metallic underground fibre optic cable and the optical fibres in accordance with the requirements of this specification, ITU-T G652, IEC 60793 and IEC 60794 as appropriate. Contract drawings previously submitted to the Employer shall be available at the time of testing.

The Contractor/Supplier shall give the Employer the requisite period of notice prior to undertaking the tests, and shall submit to the Employer a test programme and procedures for approval. **This is a Hold Point.**

Type test of offered OPGW will be waived during execution of the Contract if the Contractor submit the satisfactory type test reports of same OPGW. In case, the type test of OPGW is conducted during execution of Contract, the test to be witnessed by Employer's Engineers.

14.7.2 OPGW

14.7.2.1 Type Test

a) Tensile Performance

The test shall be undertaken in accordance with IEC 60794-4-10 and IEC 60794-1-21: Method E1. Tension shall be steadily increased to 70 % RTS and released back to initial load. The rate of increase of load shall be as per IEC 61089 Annex B. Minimum length of cable under tension shall be as per IEC 60794-4-10. The minimum test length of optical fibre for attenuation measurement and for fibre strain measurement shall be as per IEC 60794-4-10. There shall be no permanent change in the fibre attenuation at the specified wavelength after the test, while the change in attenuation during the test shall be less than 0.05db/km from zero load to 70% of the UTS of the cable. The fibre strain must be less than 0.05% at 70% of the UTS of the cable.

b) Stress-Strain

The test shall be undertaken in accordance with IEC 60794-4-10. The load conditions and the rate of increase of load shall be as specified in IEC 61089 Annex B. A sample of OPGW shall be as per IEC 60794-4-10. A sample of OPGW complete with the proposed end fittings shall be subject to a stress-strain test. There shall be no visual change to the OPGW strands after the test. The Modulus of Elasticity of the OPGW shall be measured.

c) Crush

The crush test shall be undertaken in accordance with the recommendations of Method E3 of IEC 60794-1-21. The test shall be undertaken by applying a 10kN load for 10 min to the OPGW via two 100mm x 100mm flat plates. There shall be no measurable permanent change in the fibre attenuation at the specified wavelength, while any temporary change in attenuation shall be less than 0.1db

d) Impact

The impact test shall be undertaken in accordance with the recommendations of Method E4 of IEC 60794-1-21. The test shall be undertaken by dropping a 4kg weight from a height of 150mm on the OPGW. After 20 repeated applications, there shall be no measurable change in fibre attenuation at the specified wavelength, while any temporary change in attenuation shall be less than 0.1 db.

e) Temperature Cycling

The optical performance under temperature cycling shall be tested in accordance with IEC 60794-4-10 and Method F1 of IEC 60794-1-22 with T_A and T_B as specified in Annex 14-1 The test should be undertaken twice. Cable Sample length, soak time at extreme temperatures, temperature change rate shall be as per IEC 60794-4-10. Acceptance criteria shall be as per IEC 60794-4-10.

f) Water Ingress

The optical sub-unit shall be tested for water ingress in accordance with Method F5 of IEC 60794-1-22.

g) Fault Current

A sample of OPGW not less than 10m in length shall be subject to a fault current pulse. The fault current pulse specified in Annex 14-1 shall be supplied in less than 1s after the conductor has been raised to the specified initial temperature mentioned in Annex 14-1. During the test the temperature of the optical sub-unit shall be measured, the temperature immediately after the current pulse shall be less than the specified temperatures as per IEC 60794-4-10. No of cycle shall be as per 60794-4-10. Interval between each pulse shall be enough so that the sample has stabilized at initial temperature. After the final impulse the OPGW shall be dismantled and the optical cable examined throughout its length for any signs of deterioration. Fibre optic attenuation shall be measured using light source and power meter connected to each end of the test fibre. The test length of optical fibre shall be minimum 100m. Permanent increase in attenuation shall be measured 30mins after the test. Optical attenuation shall not exceed 0.05dB/km.

h) Lightning Strike

The Contractor shall submit his proposals to the Employer to demonstrate the effectiveness of the OPGW to withstand the effects of a lightning strike. The test shall consider both an initial stroke and a power follow through. The initial peak current shall be as specified in Annex 14-1. The test shall be carried out on a sample of OPGW not less than 1m long as per Method H2 of IEC 60794-1-24. The acceptance criteria shall be (i) attenuation change is required to be less than 0.05dB/km (ii) if any wire(s) are found broken, then the calculated residual strength for remaining unbroken wires shall not be less than 75% of the original declared rated tensile strength of the completed OPGW.

14.7.2.2 Routine Test

14.7.2.2.1. OPGW on all drums shall be tested for mechanical Tests including measurement of dimensions of steel and aluminium (Al) wires and overall diameter of OPGW, measurements of thickness of Al on ACS wires, twist test of steel & Al wires, torsion test of steel wires, checking of lay length & lay ratio of layers, checking of lay directions, breaking load test of steel and Al wires and DC resistance measurement of Al and ACS wires at the factory by the manufacturer as routine tests.

14.7.2.2.2. In addition, attenuation shall be measured on each fibre of all OPGW with OTDR at the factory by the manufacturer as routine test.

14.7.2.2.3. The test results shall be available with the manufacturer and shall be submitted to the Employer, if requested.

14.7.2.3 Sample Test

Samples taken on random sampling basis from the OPGW drums ready for shipment against each batch shall be tested. 10% of the drums shall be tested for Factory Acceptance Test (FAT). Following

tests are to be done as FAT at the factory by the manufacturer which shall be witnessed by the Employer's representative.

On Complete OPGW (As per IEC 60794 and IEC 61089):

1) Diameter of cable
2) Mechanical Test of OPGW/ Breaking strength test
3) Lay length, lay ratio, lay direction of each layer
4) DC resistance of cable
5) Weight per unit length of cable
6) Visual inspection of the cable elements

On Aluminium wires (As per IEC 60889):

1) Dimension of Individual Al wires
2) Wrapping test of aluminium wire
3) Breaking load Test of individual Al wire
4) DC Resistance Test of Al

On ACS wires (As per IEC 61232):

1) Dimension of Individual ACS wires
2) Al thickness on ACS Wires
3) Breaking load Test of individual ACS wire
4) DC Resistance Test of ACS wires
5) Torsion Test of ACS wires
6) Elongation Test of ACS wires
7) Stress at 1% Elongation

On Steel wires (As per IEC 60888):

1) Dimension of Individual Steel wires
2) Wrapping test of steel wire
3) Torsion Test of steel wires
4) Breaking load Test of individual Steel wire
5) Elongation Test of steel wires
6) Stress at 1% Elongation
7) Zinc Coating test

On Optical Fibre:

1) Attenuation of each fibre with OTDR.
2) Others as per ITU-T G65 and IEC 60793

14.7.3 Optical Fibres

Optical fibres shall be tested in accordance with the requirements of ITU-T G652 and IEC 60793 as appropriate.

14.7.4 Optical Joint Boxes

Optical joint boxes shall be visually inspected to ensure they meet the specified requirements. If the external housing or its door shows any signs of distortion or any galvanizing damage then the box shall be rejected. Details of the inspection shall be recorded and shall be made available to the Engineer upon request.

14.7.5 Non-Metallic Underground Fibre Optic Cable

Non-metallic underground fibre optic cable and the optical fibres shall be tested in accordance with the requirements of ITU-T G652, IEC 60793 and IEC 60794 as appropriate.

14.7.6 Fibre Optic Cables

All fibre optic cables shall be tested prior to despatch using an OTDR on each fibre.

14.7.7 Test Certificates

Test records, covering Type and Sample tests shall be made available to the Employer.

14.7.8 Certificates of Conformity

When requested copies of the following certificates/records shall also be forwarded:

a. Optical joint boxes visual inspection records;
b. Routine test records;
c. The records of the OTDR test results.

14.7.9 Installation

14.7.9.1. The following tests shall be undertaken by the Contractor:

a. Prior to installation the fibre optic cable shall be tested with an OTDR on each fibre to ensure that no physical damage has occurred to the fibre during delivery and shall be compared with the results prior to despatch;
b. After installation the above test shall be repeated to ensure that no damage has occurred to the fibre during installation;
c. An end-to-end attenuation measurement shall be taken in each direction on each fibre using an optical source and optical power meter.

14.7.9.2. The overall attenuation of the installed cable shall not exceed that calculated using the attenuation and splice loss values specified in **Annex 14-2**.

14.7.9.3. The Contractor shall give the Engineer the requisite period of notice prior to commencing the tests. **This is a Notification Point.** Details of the test results shall be submitted to the Employer.

14.7.9.4. The supplier of the OPGW is requested to co-operate with the Fibre Optic Terminal Equipment Supplier (if this is under a separate contract) and shall supply all technical data requested.

14.8 Test Equipment

Reference should be made to **Annex 14-3** for details of the test equipment required.

14.9 Maintenance Equipment and Tools

Reference shall be made in the price schedule, mandatory spare part and tools.

Annex 14-1: OPGW Design Requirements

Description	Unit	400kV– Not applicable	230kV	132kV
Number of fibres		48	48	48
Fault current (1 second)	(kA)	11.83	5	5
Initial temperature	(°C)	40	40	40
Leading edge	(µs)	1.2	1.2	1.2
Lightning initial peak current (0.5 second)	(A)	Class 3 as per IEC 60794	Class 1 as per IEC 60794	Class 1 as per IEC 60794
Tail	(µs)	50	50	50
Power follow through	(Coulomb)	Class 3 as per IEC 60794	Class 1 as per IEC 60794	Class 1 as per IEC 60794
Temperature cycling test T_A	(°C)	5	5	5
Temperature cycling test T_B	(°C)	40	40	40

Annex 14-2: Single Mode Optical Fibre Cable Requirements

Coating diameter		µm	250 ± 15
Cladding diameter		µm	125 ± 3
Cladding non-circularity		%	≤2
Mode field diameter		µm	8.6 ~ 9.5
Mode field concentricity error		µm	≤1
Cut off wave length		nm	≤1,270
Attenuation at (maximum average)	1285 nm 1330	dB/km	≤0.40
Attenuation at (maximum average)	1550 nm	dB/km	≤0.25
Zero dispersion wave length		nm	≤1,321
Chromatic dispersion at	1285 nm 1330	ps/(km-nm)	≤3.50
Chromatic dispersion at	1550 nm	ps/(km-nm)	≤20
Individual splice loss		dB	≤0.10
Mean splice loss		dB	≤0.06

Annex 14-3: Test Equipment

OTDR

Annex 14-4: Engineering Documents to be Submitted by Contractor

Clause Reference	Document Description	Comment
14.2.3	Expected overall attenuation and dispersion	
14.4.1	Optical Joint Boxes - Contract drawings Fixing clamps - contract drawings	
14.6.1	Installation instructions	
14.6.1	Method statement	
14.7.1	OPGW fittings, Non-metallic underground fibre optic cable and optical fibres - type test certificates	
14.7.2	Type test programme	
14.7.2	OPGW - fatigue life	Documentary evidence
14.7.2	OPGW - lightning strike	Test proposals
14.7.2	OPGW - routine tests	Test proposals
14.7.4	Optical joint boxes - visual inspection test records	
14.7.9	OPGW fittings and optical fibres - type test records	
14.7.9	OPGW fittings& optical fibres- routine test records	
14.7.8	Certificate of conformity	
14.7.9	Installation test records	

Annex 14-5: Notification and Hold Points

Clause Reference	Notification Point	Hold Point
14.2.3		Optical Fibres
14.2.6		Fixing clamps
14.4.1		Contract drawings – method statement
14.6.1		Installation – Type test programme
14.7.1		Quality Control – Lightning strike – test proposals
14.7.9	Installation tests	

Annex 14-6: Reference Standards

The reference standards and other documents referred to in this section of the specifications are listed below :

IEC 60529:	Classification of decrees of protection provided by enclosures
IEC 61089:	Round wire concentric lay overhead electrical stranded conductors
IEC 60793- 1:	Optical Fibres Part 1: Generic Specification
IEC 60793-2:	Optical Fibres Part 2: Product Specification
IEC 60794-1:	Optical Fibre Cable Part 1: Generic Specification
IEC 60794-2:	Optical Fibre Cable Part 2: Product Specification
BS ISO 1461:	Specification for hot dip galvanised coatings on iron and steel articles
BS EN 1559:	Specification for Aluminium and aluminium alloy ingots and castings for general engineering purposes
BS EN 1676; BS EN 1706; BS 3100:	Specification for steel castings for general engineering purposes
BS 3643:	Ingot zinc
BS 4190:	Specification for ISO Metric hexagon bolts, screws and nuts
BS EN 1676:	Aluminium and aluminium alloys - Alloyed ingots for remelting
BS EN 10025:	Specification for hot rolled products of non-alloying structural steels and their technical delivery requirements.
ISO 898-1:	Mechanical properties of fasteners made of carbon steel and alloy steel
ITU-T G652:	Characteristics of single mode optical fibre cable.

15. Aircraft Navigation (Obstruction Aids)

15.1 Scope

15.1.1 Types and Uses

The type and arrangement of all aircraft navigation (obstruction aids) i.e. aircraft warning lights (solar or LV powered), solar arrays, batteries and aircraft warning spheres shall be approved by the Employer.

Reference is made to **Annex 15-1** for the detailed specific requirements.

15.2 Design

15.2.1 General

All aircraft navigation (obstruction aids) shall be so designed as to:

(a) Withstand the mechanical loads relevant to the installation-service-maintenance conditions and environmental effects;
(b) Minimize the number of parts and the possibility of incorrect assembly and installation;
(c) Ensure that individual components are secured against becoming loose in service; all threaded fasteners shall be locked;
(d) Utilize materials which have sufficient strength, ductility and environmental resistance to withstand the static dynamic loading;
(e) Avoid damaging the earthwire under all service conditions;
(f) Comply with the requirements of ICAO Aerodromes Annex 14 Volume 1 Aerodrome Design and Operation and Aerodrome Design Manual Part 4 unless stated to the contrary.

15.2.2 Obstruction Lights (Solar Powered)

The complete solar powered obstruction light system i.e. obstruction lights, photovoltaic cells, storage batteries and control equipment, shall be designed to ensure maximum unattended operation with minimal maintenance, i.e. maximum once per year.

15.2.2.1. Obstruction lights shall consist of one main and one standby omnidirectional lamps in compliance with **Annex 15-1**.

15.2.2.2. The light shall be equipped with LED clustered lamps with a rated life of at least 20,000 hours.

15.2.2.3. The light shall be designed to allow it to be directly installed on any vertical or horizontal surface of the tower. In case the power adapter cannot be installed at the lamp locations, an extension cable assembly with lamp holder shall be provided.

15.2.2.4. The operation of the lights during darkness or poor visibility shall be controlled by a photoelectric switch. The levels of illuminance falling on a vertical surface for activating the lights shall be agreed with the Engineer.

15.2.3 Obstruction Lights (LV powered)

15.2.3.1. Obstruction lights shall consist of one main and one standby omnidirectional red lamps in compliance with **Annex 15-1**.

15.2.3.2. The luminous intensity shall be medium and have the longest possible rated life, which should not be less than 10,000 hours.

15.2.3.3. The light shall be designed to allow it to be directly installed on any vertical or horizontal surface on the tower. The operation of the light during darkness or poor visibility shall be controlled by a photo-electric switch. The level of illuminance falling on a vertical surface for activating the lights shall be agreed with the Engineer.

15.2.3.4. At the base of the tower immediately above the A.C.D. level a termination box shall be provided complete with isolator and other control gear as necessary.

15.2.3.5. The termination box shall be manufactured from either steel or die cast aluminium to provide protection to IEC 60529 IP 55.

15.2.4 Photo-Voltaic Cells (Solar Array)

15.2.4.1. The photo-voltaic cells in conjunction with the storage batteries shall be designed to have the maximum system reliability and battery life. Solar panels shall not be designed to provide maximum power during, periods of peak solar radiation, but to provide power at an essentially constant rate over the annual solar cycle. The minimum charge state shall provide adequate reserve for weather anomalies which may comprise up to one month of continuous heavy cloud cover, whilst the maximum charge state achieved during favourable conditions shall not exceed the rated battery capacity to prevent the possibility of overcharging the battery causing electrolyte evaporation.

15.2.4.2. For protection of the solar array from reverse currents during darkness, a diode shall be placed in series with the array.

15.2.4.3. The complete solar panel shall be designed to ensure that the maximum electrical Output degradation shall not exceed 10 percent over a 10 year period.

15.2.4.4. The photovoltaic cells shall be redundantly interconnected and provided with integral bypass diodes to prevent cell overheating due to localized shading and system continuity in the event of cell circuit failure.

15.2.4.5. The complete solar panel shall be suitably sealed in an aluminium frame which effectively isolates the cells from thermal and mechanical shock and-prevents the ingress of moisture.

15.2.5 Support Framework

The solar array support framework shall be designed to mount the complete solar panel at the optimum tilt angle, and to resist the imposed wind loading calculated in accordance with Section 8 of this specification.

15.2.6 Storage Batteries

Vented lead acid electrolyte batteries of an extremely low self-discharging type shall be used in conjunction with photo-voltaic cells. Catalytic recombinator caps shall be used to reduce water loss to very low levels. The batteries shall have proven cycling abilities in conjunction with photo-voltaic operation and shall be designed to provide power during periods of low solar radiation, which shall not be less than a minimum of 5 days, reserve storage plus specified low solar storage calculated from the optimum storage array, size associated with the location.

A regulator shall be used to protect the battery from overcharging and a low voltage disconnector from excessive discharge.

The batteries must have a stable voltage characteristic with less than 5 percent variation in nominal output voltage from fully charged to discharged.

Separate batteries and chargers shall be provided for each light.

15.2.7 Battery Enclosure

A suitably designed battery enclosure shall be provided for housing the batteries and control unit at the specified work platform level.

The enclosure shall have hinged access panels for ease of battery maintenance, vent holes in the base and ventilation at the top to provide adequate air through venting of gases from the batteries. Maximum and minimum electrolyte levels of all battery cells shall be clearly visible.

15.2.8 LV Cables

All LV cables and cabling shall be in accordance with the appropriate British Standards and local health and safety requirements.

15.2.9 Aircraft Warning Spheres

Aircraft warning spheres shall be a minimum of 600 mm diameter and shall be fitted to the earthwire.

Externally, the spheres shall be coloured red or orange to meet the local environmental conditions and installed alternatively with white spheres. All component bolts shall be captive and preference shall be given to use of shear-head clamp tightening bolts. Factory formed helical armour rods shall be fitted to protect the earthwire at aircraft warning sphere locations.

15.2.10 Tower Painting

15.2.10.1. Painting of towers to comply with the requirements of ICAO and local aviation authorities, shall be undertaken when specified by the Engineer.

15.2.10.2. The paint system shall comprise an etch primer, under and gloss coat which shall be formulated to take into consideration the local environmental conditions. The paint shall not present a health hazard and shall conform to relevant current health and safety requirements.

15.2.10.3. Reference shall be made as appropriate to BS 5493. Details of the proposed painting system shall be submitted to the Engineer. **This is a Hold Point.**

15.2.10.4. For details of the extent of the painting requirements reference should be made to **Annex 15-1.**

15.3 Materials

15.3.1. Materials used in the manufacture of aircraft navigation (obstruction aids) shall be of:

(a) Adequate strength for the intended application and service life requirements (including mechanical loads, vibrations, electrical currents and environmental effects) and free from defects which would affect the performance of the equipment.
(b) Shall not be liable to intergranular or stress corrosion.
(c) The material shall not be adversely affected in the long term by a coating applied for corrosion protection.

15.3.2. Photovoltaic cells shall comprise matched monocrystalline silicon cells enclosed by a glass front surface and a rear composite layer to provide the optimum thermal and electrical performance.

15.3.3. The glass front surface shall have similar thermal expansion characteristics to the photovoltaic cell, shall be resistant to impact and abrasion by wind-blown materials and shall be self-cleaning under the action of rain.

15.3.4. All mild steel used in the manufacture of the support framework shall comply with the requirements of BS EN 10025 or BS EN 10210. Minimum steel grade shall be S275JR and S275JOH respectively.

15.3.5. Aluminium or aluminium alloy used in the manufacture of the complete solar panel frame shall comply with the requirements of BS 1474.

15.3.6. Cast aluminium and aluminium alloy fittings shall be made from aluminium or aluminium alloy of a suitable grade, complying with the requirements of BS 1490 and/or BS EN 1676.

15.3.7. Aircraft warning spheres shall be made from either glass reinforced polyester resin or aluminium sheet, having a minimum specified thickness. Aluminium sheet shall comply with the requirements of BS EN 485

15.3.8. Bolts and nuts shall be either ISO Metric Black Hexagon to BS 4190 threaded ISO Metric Course Pitch to BS 3643: Part 2 Tolerance Class 7H/8g, or ISO Metric Precision Hexagon to BS 3692. Metal washers shall be either to BS 4320, Form E, Grade 4.6 or 'bright series'. Spring Washers shall be ISO Metric to BS 4464.

15.3.9. If shear-head type bolts are used they shall be clearly marked so after the correct torque has been applied, the installed bolt may be clearly identifiable from the ground.

15.3.10. Non-metallic materials shall have good resistance to ageing and shall have adequate resistance to the effects of nitrogen oxide, ozone, ultra-violet radiation and air pollution.

15.3.11. Glass reinforced polyester resin mouldings for aircraft warning spheres shall be in accordance with BS 4549, Part 1.

15.3.12. All paints used shall be suitable for use with and not adversely affect galvanized steel.

15.4 Workmanship

The dimensions of all aircraft navigation (obstruction aids) equipment shall be shown on the contract drawings. Contract drawings including cabling layouts shall be submitted to the Engineer. **This is a Hold Point.**

All equipment shall be marked to ensure a system of traceability for each component of the equipment. Where practicable, and unless otherwise agreed between the Engineer and the Contractor /Supplier, equipment shall be clearly and indelibly marked with 6 mm high characters as follows:

(a) Identification of equipment (reference number);
(b) Maker's identification;
(c) Date of manufacture (month and year);
(d) Cast code - if appropriate;
(e) Conductor diameter range - if appropriate;
(f) Fitting bolt installation torque - if appropriate.

15.5 Protective Treatment

All parts of the aircraft navigation (obstruction aids) equipment shall either be inherently resistant to atmospheric corrosion or suitably protected against corrosion, such as may occur in transit, storage and service. All ferrous parts which will be exposed to the atmosphere in service shall be protected by hot- dipped galvanizing to comply with the requirements of BS 729. All manufacturing processes shall be completed prior to galvanizing.

The ingot zinc used for galvanizing shall comply with the requirements of BS 3436.All external threads shall be cut or rolled before hot-dipped galvanizing. Nuts to be galvanized shall be subsequently tapped 0.4 mm oversize and the threads oiled.

15.6 Installation

Aircraft navigation (obstruction aids) shall be installed strictly in accordance with the Supplier's instructions.

The proposed means of paint application shall take full cognizance of local environmental requirements and shall be subject to the approval of the Engineer. **This is a Hold Point.**

15.7 Quality Control

15.7.1 General

Type, sample and routine tests as appropriate shall be undertaken on both individual items and complete system, e.g. obstruction lights, solar panels, storage batteries etc. in accordance with the requirements of this specification. The test procedure must clearly demonstrate the suitability of the complete system to meet the environmental and operational conditions specified. The Contractor's proposals for these tests shall be submitted to the Engineer for approval before manufacture commences. **This is a Hold Point.**

Contract drawings previously submitted to the Engineer shall be available at the time of testing. The Contractor/Supplier shall give the Engineer the requisite period of notice prior to undertaking the type and sample tests, and shall submit to the Engineer for approval a test programme and procedures. **This is a Hold Point.**

15.7.2 Galvanising

Tests for galvanised equipment shall be carried out at the works to ensure compliance with the requirements of BS 729. Details of the test results shall be made available to the Engineer upon request.

15.7.3 Test Certificates

15.7.3.1. All metallic materials used in the manufacture of the equipment shall be covered by test certificates stating their mechanical and chemical properties to prove compliance with requirements of this specification and BS EN 10210, BS EN 10025, BS EN 485, BS 3 1 00, BS 4190, BS 1474, BS 1470 as appropriate.

15.7.3.2. Bolts and nuts shall be covered by the appropriate test certificate in respect of either BS 4190 or BS 3692. Tests certificates for metallic materials, bolts and nuts and where appropriate non-metallic materials shall be made available to the Engineer upon request.

15.7.3.3. Where type and sample tests are undertaken test certificates covering these tests shall be made available to the Engineer.

15.7.3.4. Where routine tests are undertaken test certificates covering the tests shall be made available to the Engineer upon request.

15.7.4 Certificate of Conformity

Prior to despatch the Contractor/Supplier shall forward to the Engineer requisite copies of the completed Certificate of Conformity. The certificate shall be supported by copies of the appropriate test reports of any type and/or sample tests undertaken.

When requested copies of the following certificates/records shall also be forwarded:

(a) Metallic material test certificates
(b) Bolt and nut test certificates
(c) Non-metallic material test certificates
(d) Galvanizing test records
(e) Routine test records.

15.7.5 Site Tests

Prior to commissioning the Contractor shall submit to the Engineer his proposals for checking/testing the complete installation. **This is a Hold Point.** The Contractor shall give the Engineer the requisite period of notice prior to undertaking the agreed commissioning tests. **This is a Notification Point.**

15.7.6 Painting

Prior to the commencement of painting the Contractor shall submit to the Engineer his proposals for checking/testing the routine quality of the Painting. **This is a Hold Point.**

Annex 15-1: Aircraft Navigation (Obstruction Aids)

Tower painting as per ICAO requirements		Yes
Tower painting as per local requirements		-
Obstruction lights		Solar powered
L.V. powered & supply voltage	V	-
Obstruction Light type		Medium Intensity, Type C
Solar powered:		
Number and position of lights per support		As per ICAO
Height and position of work platform		Top crossarm
Height and position of solar array		Earthwire
Diameter of aircraft warning spheres	mm	600
Spacing of aircraft warning spheres	m	30 between adjacent spheres on opposite earthwires

Tower Painting

All towers having more than 60m height above Ground Level (GL) are to be painted, as per the requirements of ICAO.

Annex 15-2: Engineering Documents to be Submitted by Contractor

Clause Reference	Document Description	Comments
15.2.10	Tower painting - painting system	
15.4.1	Obstruction aids - contract drawing	
15.6.2	Painting - method statement	
15.7.1	Test proposals - type, sample, routine	
15.7.2	Galvanizing test results	If requested
15.7.3	Metallic material test certificates	If requested
15.7.3	Bolt and nuts test certificates	If requested
15.7.3	Non-metallic material test certificates	If requested
15.7.3	Type test records	
15.7.3	Sample test records	
15.7.3	Routine test records	If requested
15.7.4	Certificate of conformity	
15.7.5	Commissioning test proposals	
15.7.6	Painting - routine test procedure	

Annex 15-3: Notification and Hold Points

Clause Reference	Notification Points	Hold Points
15.2.10		Tower painting system
15.4.1		Contract drawings
15.6.2		Painting - method statement
15.7.1		Test proposals
15.7.1		Type tests
15.7.5	Commissioning tests	Test proposals
15.7.6		Painting - routine test proposals

Annex 15-4: Reference Standards

The reference standards and other documents referred to in this specification are listed below:

IEC60529: Classification of degrees of protection provided by enclosures.

BS729: Specification for hot-dipped galvanising coating on iron and steel articles.

BS1474: Specification for wrought aluminium and aluminium alloys for general engineering purposes bars, extruded round tubes and sections.

BS1490: Aluminium and aluminium alloy ingots and castings for general engineering purposes.

BS3463: Specification for ingot zinc.

BS3643: ISO Metric threads. Part 2: Limits and tolerances for course pitch series threads.

BS3692: Specification for ISO Metric Precision hexagon bolts, screws and nuts.

BS4190: Specification for ISO Metric hexagon bolts, screws and nuts.

BS4320: Specification for metal washers for general engineering purposes Metric series.

BS4549: Guide to quality control requirements for reinforced plastic moulding.

Part1: Polyester resin mouldings reinforced with chopped strand mat or randomly deposited glass fibre.

BS4464: Specification for Spring washers for general engineering and automobile purposes. Metric Series.

BS5493: Protective coatings of iron and steel structures.

BSEN485: Aluminium and aluminium alloys sheet, strip and plate.

BSEN1676: Aluminium and aluminium alloys - Alloyed ingots for remelting,

BSEN10025: Specification for hot rolled products of non-alloy structural steels and their technical delivery requirements.

BSEN10210: Hot finished structural hollow sections of non-alloy and fine grain structural steels.

16. Miscellaneous

16.1 Tools and Appliances

16.1.1 Each tool or appliance shall be clearly marked with its size and/or purpose and is not to be used for erection purposes by the Contractor.

16.1.2 The tools and appliances with the appropriate boxes are to be handed over to the Employer at the Employer's stores depot at the time of arrival at site.

16.1.3 The Contractor shall, where required, by the Engineer, provide test certificates and die-stamp or indelible mark on each piece of equipment in an approved manner.

16.1.4 For details of the tools and appliances to be supplied reference should be made to **Annex 16-1.**

Annex 16-1: Tools & Appliances

(a) Sets of temporary earthing equipment shall consist of one, telescopic, Fibre glass rod 3m total length, complete with a screwing head together with 6 PVC covered 15m lengths of 150mm^2 pure aluminium conductor. Each length of conductor shall be equipped with an earth end clamp which shall have a hardened steel threaded point capable of piercing a galvanised or corroded steel surface to provide a good earth connection. In addition an alloy line end clamp shall be provided which shall be spring loaded and capable of being further tightened around a conductor of up to 32.4mm diameter, to provide a good electrical connection. The line end clamp and the screwing head of the pole shall be such that the latter is capable of holding, fixing and tightening the end clamp onto the conductor when attached to the temporary earth lead.

The leads are expected to withstand a fault current of 2.5kA for 10s.

(b) Elcometer for measuring galvanisation thickness.

17. Packing, Protection and Despatch Marking

17.1 General

17.1.1. The following minimum packing methods shall be adopted for suppliers external to the country of the transmission line installation, unless otherwise specified.

17.1.2. The Supplier shall be entirely responsible for ensuring that the packing is suitable for transit and storage and will be held responsible for any shortages or damage during transit.

17.1.3. Wherever possible, the Supplier shall utilize shipping by container vessels in the containers of the correct type for the item being shipped to reduce the likelihood of damage to the items. If containerization is not possible the requirements of the following clauses shall be applicable.

17.1.4. All materials shall be carefully packed in a manner suitable for transport to and storage under the climatic conditions present. Items packed in cases or crates shall be so secured that they are not free to move, and cannot work loose in transit.

17.1.5. Wood wool is to be avoided as a packaging material as far as possible.

17.1.6. Waterproof paper and felt lining are to overlap at the seams by at least 12mm, and the seams secured together in an approved manner, but the enclosure is to be provided with vermin proof screened openings to permit ventilation.

17.1.7. A packing note in a weather-proof plastic envelope is to be securely attached to the right hand lower corner of one side of all cases or crates. A copy of the packing list shall also be included inside.

17.1.8. All packing cases or crates shall be marked on the outside to show the correct way up and where relevant, where the weight is bearing and the correct positions for slings.

17.1.9. Shipping mark, numbers and symbols will be provided by the Employer. These marks shall be applied to conductor drums and cases either by the use of a waterproof stencil, flo-pen or any other permanent method. The use of tie-on tags is not permitted. Cases shall be marked on two opposite sides.

All marks shall be clearly legible at the time of dispatch.

17.2 Lattice Tower and Associated Steelwork

(a) Main Legs Steel Poles, Heavy Sections

As loose items, or as below .

(b) Angle Bracings and Large Plates

Bundled in packagesoflessthan5tandstrap-bondedasfollows:

Galvanized -tensional steel stripping, either:

i) Tension strapping 32mm x 0.8mm, minimum of two bands and at maximum centres of 2m; or
ii) Tension strapping 19mm x 0.8mm, minimum of three bands and at maximum centres of 1.25m.

Whichever method i) or ii) is adopted, bundles shall also have a layer of either hessian or polythene between the strap-bands and the galvanized steelwork. One end of the bundle shall also be wired in such a way as to prevent the removal of any single piece.

(c) Plates, Small Items

These shall be cased (maximum net mass 500kg).

Cases shall be of sturdy construction, made from new 25mm thick timber and constructed with annular (rag) nails. They shall have packing pieces on the underside to enable the use of fork- lift trucks.

(d) Bolts

Shall be double bagged and cased as above. A contents list shall be included in each bag. (Cases used both (c) and (d) shall be stored in dry areas both before and after packing.

Where required, materials shall be colour flashed to aid recognition.

17.3 Containerisation

Where materials shipped by the use of containers, a reduced level of packing, is acceptable as follows:

(a) Strap-band centres may be increased to 3m for 32mm x 0.8mm bands and 2.5m for 19mm x 0.8mm bands.
(b) The use of wire through bundle ends is not required.
(c) Cases may be 20mm thick timber.

17.4 Conductor

17.4.1. Conductors shall be supplied on drums of sufficient sturdiness to withstand overseas shipment, and the drums shall be securely battened to prevent damage to the conductor.

17.4.2. All wooden components shall be manufactured from sound defect-free seasoned softwood and suitable for prolonged storage without deterioration. Wood shall be either planed or finely sawn to facilitate accuracy in assembly. The thickness of each ply or component part shall be of reasonable uniformity.

17.4.3. The flanges of drums shall be constructed from two ply of wood laminated in such a manner to be cross-grain to each other. The boards shall be close butted to provide maximum support. Fastenings of the flanges shall be with suitable bright nails with the head countersunk on the inside flange. A flange conductor hole of sufficient diameter for the free passage of the conductor shall be cut in one flange. The exposed end of the conductor shall be protected by a suitable sheet metal plate.

17.4.4. Drainage holes shall be provided through each flange as close as possible to the underside of the barrel lagging. The inner checks of the drum shall be painted with an aluminium flake or bitumen based paint.

17.4.5. The spindle hole shall be round and cut through the centre of the centre board of each flange ply. The spindle holes, of not less than 80mm diameters, shall be reinforced by a 6mm mild steel plate bolted to each flange.

17.4.6. The drum barrel shall be of the segmented type, with supports and cross struts, with a diameter not less than 30 times the conductor diameter. The barrel lagging shall be closely butted and shall provide a smooth external finish to the conductor. The barrel and flanges shall be securely clamped together by not less than six M20 bolts.

17.4.7. The inner end of the conductor shall be brought through the drum flange and secured by staples. The outer end shall also be secured to the inner face of the flange in a similar manner painted with aluminium flake paint.

17.4.8. The outer layer of the conductor on the drum shall be covered by either a layer of sheet plastic or waxed paper secured immediately under the circumferential battens so that it is not in contact with the conductor.

17.4.9. Circumferential battens shall enclose the conductor space completely. They shall fit flush with the outer flanges and shall be securely fixed.

17.4.10. Drums shall be provided with a secure waterproof label displaying the maker's name, type, size and length of conductor on the drum. Drum serial number shall be either chiselled into one drum cheek or impressed onto a secure metallic label. Drums shall be painted on all outer surfaces in finishing colours to the option of the manufacturer.

17.4.11. Drums shall display an arrow and the words "Roll This Way" on each cheek to show the correct direction of rolling.

17.4.12. Steel conductor drums shall be used for any spare conductor supplied and shall comply with the requirements of the American Aluminium Association Standards or other equivalent National Standards.

17.5 Insulators

17.5.1 Insulators shall be crated, each crate shall contain insulators units of the same type. Crates shall be either hexagonal or rectangular cross section.

17.5.2 Crates shall be wooden and close boarded, manufactured from sound seasoned softwood a minimum of 20mm thick. They shall be tensioned strapped at not less than three positions along their length. All crates shall be marked with the batch number and insulator code number.

17.5.3 Special attention shall be paid to ensure that all insulators are complete with their security clip.

17.6 Insulator, Conductor and Ancillary Fittings

Insulator, conductor and ancillary fittings shall be cased as per chapter 17.2(c).

17.7 Cable

17.7.1 Cable shall be supplied on drums of sufficient sturdiness to withstand overseas shipment, and the drums shall be securely battened to prevent damage to the cable.

17.7.2 Steel drums shall be used for cable to be supplied and shall comply with the requirements of this specification or other equivalent National Standards.

17.7.3 Drums shall be provided with a secure waterproof label displaying the maker's name, type, size and length of cable on the drum. Drum serial number shall be either chiselled into one drum flange or impressed onto a secure metallic label. Drums shall be painted on all outer surfaces.

17.7.4 Drums shall display an arrow and the words "Roll This Way" on each flange to show the correct direction of rolling.

17.8 Associated Accessories

17.8.1 Associated accessories shall be cased (maximum net mass 500 kg).

17.8.2 Cases shall be of sturdy construction, made from new 25 mm thick timber and constructed with annular (rag) nails. They shall have packing pieces on the underside to enable the use of fork-lift trucks.

18. Method of Measurement & Payment

18.1 Introduction

18.1.1 General

18.1.1.1. Payment will be made in accordance with the unit prices and total prices set against the items in the Price Schedules as amplified in this section and against the final quantities approved by the Employer. These unit prices and total prices shall include all of the work, temporary and permanent, necessary to comply with the Contract. Where non-quantified unit prices are required in the Bid submission, they shall be so provided. Measurement for the purposes of payment shall where appropriate be made jointly by the representative of the Employer and the Contractor.

18.1.1.2. The Contractor when requested shall attend for purposes of measurement, or otherwise accept measurements made by the Employer alone.

18.1.1.3. Where applicable the Contractor shall indicate on each invoice the identification number of each support to which items in the invoice refer.

18.1.1.4. Unit prices in the Schedule where applicable shall be deemed to include for all work on site irrespective of access conditions, including slope of ground, nature of subsoil, presence of water or other obstacles adjacent to or across the line of the route.

18.1.1.5. The unit prices shall include all incidental expenses which the Contractor or specialist Subcontractor may incur in the preparation and maintenance of access, in the provision of site services and of all transportation for labour whether skilled or unskilled.

18.1.1.6. The unit prices in the schedules shall include all out allowances or other supplementary payment to skilled or unskilled labour, customary, authorised or required by regulations in force at the date of the Bid.

18.1.1.7. The unit prices shall be deemed to include payment to labour, or other expenses incurred for idle time during which work on site is interrupted by weather conditions or flooding by storm overflow or the like.

18.1.1.8. Whilst every assistance will be provided to facilitate line construction activities in sequence in accordance with the Contractor's agreed programme of work, there could be occasions when this may not be possible. No claims for additional costs to the Contractor will be accepted solely for such discontinuity of working.

18.1.1.9. Only those prices shown in the miscellaneous unit prices will be accepted as additional to the ContractpricewheretheuseofsuchunitpricesisauthorisedbytheEmployer.

18.1.2 Not used

18.1.3 Nominated Subcontractor/Supplier (not used)

18.1.4 Specialist Subcontractors (not used)

18.1.5 Quantities

The quantities set out in the schedules are unless otherwise defined estimated quantities of the Works. They are not to be assumed as the actual and correct quantities to be executed by the Contractor in fulfilment of his obligations under the contract. The Contractor is presumed to have satisfied himself as to the relevance of the estimated quantities in the preparation of his Bid.

Final quantities shall be established and agreed upon between the Employer and Contractor immediately after the signing of the contract.

18.1.6 CIF/CIP Price

The term CIF/CIP shall be governed by the rules prescribed in the Incoterms of current edition published by the International Chamber of Commerce, Paris.

18.1.7 Freight and Insurance Prices (not used)

18.1.8 Ex-works (EXW) Price

The term EXW shall be governed by the rules prescribed in the Incoterms of current edition published by the International Chamber of Commerce, Paris.

18.1.9 Local Transportation & Erection Price (not used)

18.1.10 Drawings, Reference Standards and Records

The provision of all drawings, design calculations, records etc. as specified in the Contract shall deemed to be included in the contract price.

18.1.11 Test of Major Items for Quality Control

d. Proto-assembly test of towers: Proto assembly tests of towers to be performed in the manufacturer's/test station’s premises before starting the batch manufacturing of towers.

e. Proto type load test of towers: Not applicable.

f. Factory acceptance test (sample test) of towers: Following acceptance test of tower materials shall be done: sample tests of tower materials (visual check, galvanizing test and mechanical test of members/nuts & bolts/plates as specified in the specification) prior to each shipment of materials.

g. Factory Acceptance Test (Sample Test) of Insulators, Conductor, insulator & conductor fittings with accessories, OPGW & OPGW fittings with accessories before each shipment of materials and type test of insulator strings (if applicable): Sample Test of Insulators, Conductor, insulator & conductor fittings with accessories, OPGW & OPGW fittings with accessories shall be done before each shipment of materials.

18.1.12 Instruction of Employer's Staff

18.1.12.1 Overseas Training

Contractor shall conduct training on Tower Design with PLS Tower, Pole Design with PLS Pole and Overhead Transmission Line Design with PLS CADD Software. Following topics shall be covered:

- PLS Pole Design of steel transmission poles, Defining component libraries, Creating pole geometries, Defining loads, Model checking and analysis & Optimising elements.
- PLS Tower Design of lattice transmission tower, Defining component libraries, Defining joints/nodes, adding members, copying and transposing sections to build complex modular structure geometries, Defining loads, Model checking and analysis & Optimising elements
- PLS CADD I Overview of PLS modelling process, Creating and understanding survey points, Defining weather load cases, Setting up conductor swing, templating, mechanical criteria creating and editing method 1 structures, Manual templating, Automatic spotting, Generating .pfl profiles, Setting up of profile sheets, drafting & annotation. Use of PLS CADD /Lite and the link between PLS Pole /Tower Using method 4 structures (Finite element modelling), Overview of line optimisation process, Optimum spotting, Management of preferences, backups and user defined libraries, Advanced display options, Inspect design check reports, Importation of digitised drawings, Importation of data & data filtering, Generating 3D .xyz profiles and TIN model functionality, Guy and leg extension reports, Investigating conductor swing, Generation of 3D mpegs and Images (Virtual line inspection), Generation of stringing charts, Generation of staking tables, Exporting & viewing the line in Google Earth

Two (02) POWER GRID Engineers shall be given above training at Power Line System (PLS) USA's recognised training centre by the PLS authorized trainer at outside Employer's country for 7 days excluding travel time.

18.1.12.2 All the costs related to the above visits including return airfare from Bangladesh to the Manufactures/contractor's Head office or relevant office/plant/factory, Hotel Fare, Food cost, Traveling cost, laundry expenses, medical insurances and all other costs shall be borne by the Contractor. A diem allowance of US$ 100(One hundred) shall be given by the Contractor additionally to each Engineer/official of the Employer per day including the traveling time. All costs of above visits shall deemed to be included in the Contract Price.

18.1.12.3 Training within Employer's Country– Not Applicable

.

18.2 Survey

Full precision profile survey undertaken by the Contractor on the Employer's instruction shall be paid for as per unit prices in the Price Schedule and shall be measured to the nearest metre along the centre-line of the route. The unit price shall include for the establishment or re-establishment of the line route from terminal points and other such fixed points the Employer may define, full ground survey, preparation and submission of route maps, Mouza maps, profile drawings with tower plotting, SIMMs document, tree marking and tree schedule and pegging of tower locations. During check survey, the route might need to be changed due to field requirements. Cost involved in such changes shall deemed to be included in the price indicated in the price Schedule. Payment shall be done considering the final length of the line route.

18.3 Route Clearance & Access

Route clearance undertaken by the Contractor on the Employer's instruction shall be paid for at Schedule B unit prices and shall be measured to the nearest metre along the centre line of the route. The prices of route clearance shall include payment of compensation for crops, trees, houses, etc. and all kinds of damage compensation.

18.4 Foundations

18.4.1 General

18.4.1.1. The prices quoted in Price Schedule for the supply and installation of a foundation refers to a foundation required in accordance with the Specification and 'Method of Measurement and payment'. Where additional work is required over and above that provided for in the Specification and 'Method of measurement and Payment' this will be paid on a measured basis at miscellaneous unit prices or unit prices to be agreed.

18.4.1.2. The unit prices for foundations shall include all necessary geotechnical investigation and geotechnical studies as defined in the Specification or as required by relevant authorities.

18.4.1.3. The unit prices for all foundations shall include for site clearing, excavating in any material and by any means, manual or mechanical, and for ensuring, stability and natural drainage inside the working area, for all back filling, compacting and disposal of surplus material, routine testing, site restoration and for all necessary supports to sides of excavations.

18.4.1.4. The complete foundations for a tower shall be paid for at the appropriate Price Schedule unit prices.

18.4.1.5. The unit price shall include for all excavations, conventional pumping (including well-point de- watering), excavation supports, concrete work, formwork. reinforcing, stub steelwork, stub cutting, routine testing, backfilling, clearing up and all other work required to complete the foundation in accordance with the Specification.

18.4.1.6. The unit prices shall also include supply of weak-mix concrete or the importation of any back fill material necessary due to the excavated material being unsuitable as backfill.

18.4.1.7. The unit prices for foundations shall include the use of whichever type of cement is to he used and density of concrete necessary to meet the requirements of the Specification.

18.4.1.8. The unit prices for foundations shall include all stub steelwork installation and setting out including the use of templates, setting to any level and any excavation necessary for Setting out. The protective treatment to defined concrete faces or support steelwork and provision of site protection barriers shall be included in the rates for the foundations.

18.4.1.9. The unit prices for foundations shall include the cost for all earthing requirements.

18.4.1.10. Where site stabilization outside the defined 'working area' is required this shall be undertaken at unit prices to be agreed.

18.4.1.11. Design tests on foundations to prove the foundation design shall be paid for at the unit prices quoted. The unit prices shall include for the removal of concrete and steel down to 1m below ground level where this is deemed necessary by the Employer.

18.4.1.12. All costs regarding making necessary arrangement for de-watering or whatsoever required starting the foundation inside river or water logged locations shall be included in the unit price of foundation.

18.4.2 Piled Foundations and Special Foundations

The complete foundations for each support shall be paid for at the appropriate Schedule B unit prices. The unit prices shall include for mobilization and de-mobilization of piling rig, setting out, cleaning, cutting, to length, reinforcement and pile cap connection, jointing of piles as necessary irrespective of number of piles, all excavations (including rock), conventional pumping (including well-point de-watering), excavation supports (including use of bentonite slurries), concrete work for piles, pile cap and tie beams, formwork, reinforcing stub steelwork, stub cutting, routine testing, backfilling, clearing up and all other work required to complete the foundation in accordance with the Specification.

The unit prices for piled foundations shall be based on the unit price for a complete tower foundation including piles, pile cap and tie beams etc..

18.4.3 Flood Protection Walls (not used)

18.4.4 Miscellaneous Unit Prices

The miscellaneous unit price for additional excavation shall include for site clearing, excavating in any material and by any means manual or mechanical and for ensuring, stability and natural drainage, pumping, backfilling, compacting and disposal of surplus material, site restoration and for all necessary support to the sides of the excavation.

The miscellaneous unit price for additional concrete shall include for all design and preparation formwork and all other work necessary.

The miscellaneous unit price for reinforcement shall include for design and drawing preparation of bar bending schedules, cutting, bending, fixing and all other associated activities.

18.5 Steel Towers

18.5.1. Steel towers normal extensions shall be paid for at Schedule B unit prices. The unit prices shall include for standard crossarms and shall include stub steelwork.

18.5.2. The unit prices for steel towers shall include for access facilities, anti-climbing devices, attachment plates, ancillary steelwork etc. used as standard fittings on the tower.

18.5.3. The unit prices shall include for all tower mounted notice plates.

18.5.4. Type tests, including prototype tests (if required by this specification), which shall be conducted at an independent testing facility or manufacturer's own testing facility on the specified Contractor-designed lattice steel towers, shall be paid for at the unit prices quoted in Schedule B, but only if the test proves that the Contractor-designed tower complies with the requirements of the specification (see Tower Section).

18.5.5. Special Supports and additional steelwork to the approved design shall be paid for at Schedule B unit prices.

18.5.6. The unit price of towers shall include all supplies and all works associated with the towers which are specified in this bid document.

18.5.7. The painting of towers in accordance to ICAO regulations painting of bottom parts of towers in flooding areas shall be paid based on unit prices, which include supply of materials and the specific works.

18.6 Insulator Sets and Associated Fittings

18.6.1 All Insulator sets shall be paid for at Schedule B unit prices. The unit prices for insulator, sets shall include for all insulator units, links, sag adjusters, turnbuckles, weights, insulators protective devices (arc horns), tension joints (dead ends) and suspension clamps (Inclusive of helical armour rods), used as a standard between the support and the phase conductor and all others fittings specified to be supplied in this tender document.

18.6.2 Unit prices for earthwire tension and suspension sets shall where specified include for all earthwire bonding to the supports including all earthwire bonding clamps in accordance with the Specification and all others fittings specified to be supplied in this tender document.

18.6.3 All conductor tee-connectors and line termination fittings shall be paid for at Schedule B unit prices.

18.7 Conductor and Fittings

18.7.1. Phase conductors and earthwires including OPGW shall be paid for at Schedule B unit prices, and shall be measured to the nearest meter after erection, along the centre of the route without allowance for sag jumpers or scrap. The supply and erection unit price shall include for all normal phase and earthwire jumpers including the jumpers at terminal supports between phase conductors or earthwires and downleads.

18.7.2. Downleads between terminal supports and anchorages and down droppers between downleads and substation equipment shall be paid for at Schedule B unit prices. The unit prices shall include for conductors, jumpers and associated fittings.

18.7.3. The cost of fibre optic earthwire (OPGW) connections to the joint boxes, fixing clamps, joint boxes and fusion splicing of optical fibres shall be included in the erection unit price of OPGW.

18.7.4. The aforementioned erection unit prices shall include all joints, clamps and fittings other than insulator sets and their fittings, tension joints (dead ends) and/or earthwire, jumpers and downlead conductors.

18.7.5. All spacer dampers, vibration dampers and spacers including bonding and weighted jumper and/or spacer shall be paid for at Schedule B unit prices.

18.8 Aircraft Navigation (Obstruction Aids)

The unit price shall include for the warning lights and as appropriate connection to the LV mains supply or solar panels, storage batteries etc., all power and control cables, solar light switches, support steel works as necessary.

18.9 Cables and Fittings

The power cables and optical fibre cables shall be paid for at the Schedule of Rates and Prices, and shall be measured to the actual length installed after completion of installation and jointing.

The cost of the joint boxes of optical fibres shall be included in the supply unit price of Optical fiber cable.

18.10 Miscellaneous

Tools and spares shall be paid for at the Schedule B unit prices.

18.11 Payment for Work Carried out at Time and Material Rates

18.10.1. The Employer may, if in their opinion it is necessary or desirable, order that any additional or substituted work shall be executed on a Time and Material basis.

18.10.2. No work shall be carried out on a Time and Materials basis without written instructions of the Employer. All applications for payment for such work by the Contractor shall be accompanied by statements, authorizing the undertaking of such work, duly signed by the Employer and shall be submitted within three months of completion of such work.

18.10.3. When the work is in progress the Contractor shall render day work sheets in duplicate to the Employer showing the number of men so employed with the number of hours worked and detailed quantities of materials used. The Contractor shall obtain the Employer's certification of the day work sheets at the end of each working week whilst the work is in progress and failure to do so shall render the Contractor liable to forfeiture of payment.

18.10.4. Where the Contractor is required to carry out work at the Time and Material unit prices, the Employer will furnish the Contractor with such particulars as necessary to enable the Contractor to prepare such drawings and schedules as required for such work. Unit prices for work executed on a Time and Material basis shall be agreed.

19. Erection / Installation of Overhead transmission lines in the areas exposed to electric field

19.1 Introduction

19.1.1. The erection / installation of overhead transmission lines near the energized overhead lines will strictly observe the provisions of IEEE STD 524 - 2003 "IEEE Guide to the Installation of "Overhead Transmission Line", as follows:

Chapter 5 - Grounding equipment and method;
Chapter 10 - Typical procedures for stringing operations, paragraph:

- 10.3.2 Equipment
- 10.3.3Bonding and grounding of conductor end
- 10.6 Dead-ending precautions

19.1.2. Voltage sensors will be compulsory provided for the teams working in areas exposed to electrical field.

19.1.3. Where a new overhead line is being installed adjacent to, or parallel with an existing energized transmission line all tools and machinery (trucks, cranes etc.) will be placed in such a way that during the work to keep a minimum distance to the under tension elements as follows (protection area):

2.0 m for overhead lines 0.4 … 20 kV;
3.0 m for overhead lines 132 kV;
4.0 m for overhead lines 230 kV;
5.0 m for overhead lines 400 kV.

19.1.4. Pegs / and strips will mark the protection areas Also, all machinery will be grounded by copper conductors ($S \geq 16\ mm^2$) to the tower earthing or to provisional earthing made by metallic rods.

19.2 Foundation Installation

All cranes and other machineries used for digging, concrete casting, compacting etc. will be provided with devices for voltage presence signalization. Also will be grounded to the earthing systems as shown above.

19.3 Gin Pole Erection

19.3.1The gin pole erection could be done with the inductive overhead line energized if the distance between the limit of protection area and the nearest leg of tower, which will be erected, is bigger than tower and gin pole height.

19.3.2Also before the starting of base trunk erection the main members have to be grounded to an earthing system

19.3.3Ropes to avoid any casual breaking of detachment will securely bond the gin pole anchors. All machineries used for gin pole erection will be grounded as shown above.

19.4 Crane Erection

The crane erection could be done with the inductive overhead line energized whether the distance between the limit of protection area and the nearest leg of tower is bigger than the total length of telescoping boom and the length of the last trunk (generally earth wire peak).

19.5 Conductor Stringing

19.5.1. Generally, the following operations could be carried out with the parallel inductive overhead line energized:

Transport of materials (conductors, insulators, hardware);
The insulator string assembling near the tower location;
Drums preparations for stringing;
Conductor clipping;
Jumper installation.

19.5.2. All other operations regarding the conductor stringing have to be done with the inductive overhead line de-energized, except the following situation.

19.5.3. Whether the maximum values of touch voltage and step voltage calculated by Contractor are less than permissible values stated in his conductor stringing methodology, could be carried out the following operations:

conductor stringing;
mounting of the dampers, spacers and spacer dampers, warning spheres.

19.5.4. Conductor stringing precautions:

The rolling blocks will be without neoprene and grounded, to an earthing system by flexible copper conductor ($S \geq 16$ mm²);
The machineries used (bull wheel puller, bull well puller, drum puller, tractors etc.) will be grounded in same way;
The jumpers between sections will be grounded also to the earthing system;
During stringing the conductors will be securely bonded by non-metallic ropes to avoid uncontrolled movements.

19.5.5. Conductor clipping mounting of the dampers, spacers and spacer dampers, warning spheres precautions.

19.5.6. Before starting the work will be established the "protection work zone".
19.5.7. For suspension towers, the protected work zone will be marked by two flexible copper conductors (S ≥ 16 mm²) mounted each side of rolling block.

19.5.8. For angle towers, the same conductors fixed near the dead-end clamps will mark the protected work zone.

19.5.9. The installation of conductors for overhead lines in parallel with other energized overhead lines is forbidden in bad weather conditions (rain, wind, fog, lightning).

19.6 Second Circuit Installing

19.6.1In case of installing the second circuit of an old line, before starting the works,

The towers and foundations shall be checked mechanically for supporting the second circuit in all design cases
All towers shall be inspected and where angles and/or bolts are missing, new elements shall be installed

19.6.2The IEEE provisions and tool and machineries described in clause 19.1 shall be observed.

19.6.3The conductor stringing shall be in accordance to operations and restrictions described in clause 19.5.

19.6.4Before starting the works the Contractor shall send for approval his conductor stringing methodology.

19.6.5For details of the equipment and works reference should be made to **Annex 19-1**.

Annex 19-1: Requirements for Stringing the Second Circuit

Not applicable

20. Test on Completion

20.1 Final Construction Check

20.1.1. Before completion of transmission lines, the Contractor shall submit final check erection documentation for approval

20.1.2. Subsequent to the completion of the transmission line construction, the Contractor shall carry out final checking and testing works and shall supply:

a. tools, appliances and spare materials required for maintenance of the transmission lines and
b. all outstanding drawings and documentation to be provided under the contract.

20.1.3. The final construction check shall include but not be limited to:

tighten bolts and fix missing members to towers;
remove all scaffolds and equipment and clear all debris and other rubbish from the site;
restore surface damage, foundation subsidence and carry out erosion control measures, where directed by the Employer's Representative or as required by local authorities or regulations;
remove of all left-over materials at winch yards, drum yards and store yards;
complete danger tree cleaning and tree re-cleaning and the right-of-way

20.2 Test on Completion

20.2.1 Pre-Commissioning Testing

20.2.1.1 Pre-commissioning Line Testing

As preamble, the civil work tests will be performed prior to approval tower erection and tower erection tests and tower earthing system resistances will be performed prior conductor stringing, it means before entering into the next hierarchy, successful completion of preceding tests has to be certified for each functional group of equipment. The recording documents shall be attached to the line manual.

20.2.1.2 Pre-Commissioning Optical Link Testing

Before completion, the optical performance of the OPGW and ADSS and if applicable OPUG cable installation shall be carried out progressively as each joint is installed, to ensure that the losses for each individual component and the complete installation are within the required values.

The following attenuation tests shall be carried out using methods approved and witnessed by the Employer's Representative:

OTDR tests of delivered cable lengths - All fibres of each OPGW drum shall be tested from both ends of the drum at wavelengths of 1550 nm. The measured attenuation shall not exceed the specified maximum values;

OTDR tests of completed joints - Tests at wavelengths of 1550 nm shall be carried out on each fibre from both ends of the jointed OPGW as each joint is installed. The average attenuation of each joint determined from the progressive measurements from each end shall not exceed the specified maximum values for each optical fibre.

20.2.1.3 Line Parameter Measurement

Before charging the line, the contractor shall measure all the line parameters accurately and submit to the employer using their owned or rented equipment.

20.2.2 Commissioning Testing

20.2.2.1 Commissioning Line Testing

Prior to the handover of the completed line, the following tests shall be carried out:

conductor electrical continuity tests for each phase, using telephone signals or an alternative method approved and witnessed by the Employer's Representative;
insulation megger tests for each phase, witnessed by the Employer's Representative;
tower earthing system electrical resistance measurements by means of a high frequency instrument arranged by the Contractor and approved by the Employer's Representative.

20.2.2.2 Commissioning Optical Links Testing

Commissioning optical links testing refers to OTDR tests of complete OPGW installation.

The average of the attenuation measurements from each end of the fully installed OPGW shall not exceed the maximum value calculated according to the number of components installed, for each optical fibre, between the Optical Distribution Frames installed in Substations.

$$[(L_{line} + L_{ADSS} + L_{OPUG}) \times 0.25 + N_{joint\ box} \times 0.06 + 2 \times 0.15_{\text{attenuation of Patch Chords}}]$$

20.2.3 Safety Measures after Final Checking

On completion of the final checking and testing, the Contractor shall deliver to the Employer /Employer's Representative a written statement certifying that the line is complete in every respect and that all earths placed by the Contractor have been removed and that every member of the Contractor's staff has been informed that he must not work on the line again unless in possession of an authority signed by the Employer's Representative.

20.2.4 Line Thermographic Analysisby Helicopter / Drone (Hot-Spot)

During the defects liability period, the Employer will perform and check the line for hot spots. All hot spots found, including local damages, shall be remedied by the Contractor on his own costs.

20.2.5 Maintenance during Liability Period, prior to Final Taking-Over

The Contractor shall ensure the integrity of the line components on the line and waiting for the final checking and testing.

This applies especially to insulators, towers (for small damages), soil erosion around foundations and vegetation re-clearing

The costs of the line maintenance prior final taking-over shall be borne by the Contractor.

21. Painting of Bottom Parts of Towers

21.1. All tower steelwork upto minimum height of 3m above ground level shall be protected by coal tar epoxy coatings.

21.2. In some areas where the tower may be under water during the rainy season, the tower (All members) shall be painted for navigation with reflecting paint up to 3 m above epoxy coat. The Contractor has to submit the details specification of the reflecting paint and the location nos. of the towers which shall be painted, to the Employer's engineer for approval before start of the painting.

21.3. All painting shall be done in fine weather and surfaces must be dry before commencement of each coat.

21.4. Details of the paint, Manufacturer, surface preparation and method of application shall be submitted for Employer's Representative's approval prior to commencement of painting.

21.5. Before application of coal tar epoxy, galvanized steel members shall be lightly grit blasted (i.e. one pass of the grit blast nozzle at a distance of approximately 600 mm from the surface) to provide a suitable profile for adhesion of the coating.

21.6. Within four hours of blasting the first coat of coal tar epoxy shall be spray applied to the clean, dry steel to give a dry film thickness of not less than 150 microns. The coating shall be checked for thickness using a magnetic coating thickness gauge and for pinholes using a spark tester. Any deficiencies shall be repaired immediately.

21.7. A second coat of coal tar epoxy shall be applied after a minimum of four hours after the application of the first coat but not later than five days after the application of the first coat to give a total dry film thickness of not less than 300 microns. Coal tar epoxy shall not be applied when relative humidity exceeds 85%.

21.8. For site application the same procedure shall be adopted except that use of an 'etch primer' instead of blast cleaning on site will be permitted. The 'etch primer' must be obtained from the same supplier as the coating and applied strictly in accordance with the manufacturer's instructions including the cleaning and decreasing of the tower steelwork on site.

22. Bid Drawings

22.1 The following drawings are enclosed for tender purposes

Item	Drawing Number	Title
22.1.1	**Drawings for 132kV Transmission Line**	
(a)	**Hardware Fittings**	
(i)	POWER GRID/132kV/SS	Suspension set for conductor
(ii)	POWER GRID/132kV/HS	Heavy suspension set for conductor
(iii)	POWER GRID/132kV/TS	Tension set for conductor
(iv)	POWER GRID/132kV/ULD	Upright low duty tension set
(v)	POWER GRID/132kV/ILD	Inverted low duty tension set
(vi)	POWER GRID/132kV/OPGW/SS	OPGW suspension set
(vii)	POWER GRID/132kV/OPGW/TS	OPGW tension set
22.1.2	**Drawings for 230kV Transmission Line**	
(a)	**Hardware Fittings**	
(i)	POWER GRID/230KV/SS	230 kV suspension set for twin conductors
(ii)	POWER GRID/230KV/TS	230 kV tension set for twin conductors
(iii)	POWER GRID/230KV/ULD	230 kV upright low duty tension set for twin conductors
(iv)	POWER GRID/230KV/EW/SS	Earthwire suspension set
(v)	POWER GRID/230KV/EW/TS	Earthwire tension set
(vi)	POWER GRID/230KV/OPGW/SS	OPGW suspension set
(vi)	POWER GRID/230KV/OPGW/TS	OPGW tension set
22.1.3	**Drawings for 400kV Transmission Line– Not applicable**	
(a)	**Hardware Fittings**	
(i)	POWER GRID/400KV/SS	Suspension set for conductor
(ii)	POWER GRID/400KV/HS	Heavy suspension set for conductor
(iii)	POWER GRID/400KV/TS	Tension set for conductor
(iv)	POWER GRID/400KV/ULD	Upright low duty tension set

Item	Drawing Number	Title
(v)	POWER GRID/400KV/ILD	Inverted low duty tension set
(vi)	POWER GRID/400KV/OPGW/SS	OPGW suspension set
(vii)	POWER GRID/400KV/OPGW/TS	OPGW tension set
(viii)	POWER GRID/400KV/EW/SS	Earthwire suspension set
(ix)	POWER GRID/400KV/EW/TS	Earthwire tension set
(x)	POWER GRID/400KV/RC/SS	River Crossing suspension set for conductor
(xi)	POWER GRID/400KV/RC/TS	River Crossing tension set for conductor
22.1.4	**Other Drawings**	
(i)	POWER GRID/TL/INS	Typical drawing for insulator showing zinc sleeve & straight head
(ii)	POWER GRID/TL/EARTHWIRE, Rev.1	Earthing arrangement
(iii)	POWER GRID/DC/DP	Danger plate for double circuit towers
(iv)	POWER GRID/NP	Number plate
(v)	POWER GRID/SB	Step bolt

22.2 The following drawings are included in the CD. These drawings are already approved and to be considered part of this bidding document

Item	Drawing Number	Title
(1)	**Towers**	
1.1	**132kV Double Circuit Towers**	
(a)	Tower type 1DL Narrow base	
(i)	T2005-1DL-01, Rev-A	132kV Tower Type - 1DL, Top Part
(ii)	T2005-1DL-02, Rev-B	132kV Tower Type - 1DL, Bottom Part
(iii)	T2005-1DL-03, Rev-B	132kV Tower Type - 1DL, E+0 Body Extension
(iv)	T2005-1DL-04, Rev-B	132kV Tower Type - 1DL, E1.5 Body Extension

Item	Drawing Number	Title
(v)	T2005-1DL-05, Rev-B	132kV Tower Type - 1DL, E3 Body Extension
(vi)	T2005-1DL-06, Rev-B	132kV Tower Type - 1DL, E4.5 Body Extension
(vii)	T2005-1DL-07, Rev-B	132kV Tower Type - 1DL, E6 Body Extension
(viii)	T2005-1DL-08, Rev-B	132kV Tower Type - 1DL, E9 Body Extension
(ix)	C870/1DL/STUB-01, Rev-0	132kV Tower Type - 1DL, Detail Drawing of Stub & Cleat for Body Ext. +0M, +1.5M, +3M, +4.5M, +6M & +9M
(x)	C870/1DL/STUB-02, Rev-3	132kV Tower Type - 1DL, Detail Drawing of Stub & Cleat for Body Ext. +0M, +1.5M, +3M, +4.5M, +6M & +9M WITH +2.0M Raised Chimney
(xi)	T2005-1DL-10, Rev-A	132kV Tower Type - 1DL, Adjustment Template
(b)	Tower type 1D1 Narrow base	
(i)	T2005-1D1-01, Rev-B	132kV Tower Type - 1D1, Top Part
(ii)	T2005-1D1-02, Rev-A	132kV Tower Type - 1D1, Bottom Part
(iii)	T2005-1D1-03, Rev-B	132kV Tower Type - 1D1, E+0 Body Extension
(iv)	T2005-1D1-04, Rev-B	132kV Tower Type - 1D1, E1.5 Body Extension
(v)	T2005-1D1-05, Rev-B	132kV Tower Type - 1D1, E3 Body Extension
(vi)	T2005-1D1-06, Rev-B	132kV Tower Type - 1D1, E4.5 Body Extension
(vii)	T2005-1D1-07, Rev-B	132kV Tower Type - 1D1, E6 Body Extension
(viii)	T2005-1D1-08, Rev-B	132kV Tower Type - 1D1, E9 Body Extension
(ix)	T2005-1D1-11, Rev-0	132kV Tower Type - 1D1, E12 Body Extension
(x)	C870/1D1/STUB-01, Rev-0	132kV Tower Type - 1D1, Detail Drawing of Stub & Cleat for Body Ext. +0M, +1.5M, +3M, +4.5M, +6M, +9M
(xi)	C870/1D1/STUB-02, Rev-0	132kV Tower Type - 1D1, Detail Drawing of Stub & Cleat for Body Ext. +12M
(xii)	T2005-1D1-10, Rev-A	132kV Tower Type - 1D1, Adjustment Template
(xiii)	1D1+Ext up to 9m+2m RC, Rev-1	132kV Tower Type - 1D1, Detail Drawing of Stub & Cleat for Body Ext. +0M, +1.5M, +3M, +4.5M, +6M, +9M with 2m RC
(xiv)	1D1+Ext 12m+2m RC, Rev-1	132kV Tower Type - 1D1, Detail Drawing of Stub & Cleat for Body Ext.+12M with 2m RC.
(c)	Tower type 1D25 Narrow base	
(i)	T2005-1D25-01, Rev-B	132kV Tower Type - 1D25, Top Part
(ii)	T2005-1D25-02, Rev-B	132kV Tower Type - 1D25, Bottom Part
(iii)	T2005-1D25-03, Rev-A	132kV Tower Type - 1D25, E+0 Body Extension
(iv)	T2005-1D25-04, Rev-A	132kV Tower Type - 1D25, E1.5 Body Extension
(v)	T2005-1D25-05, Rev-C	132kV Tower Type - 1D25, E3 Body Extension
(vi)	T2005-1D25-05A, Rev-0	132kV Tower Type - 1D25, E9 Body Extension
(vii)	C870/1D25/STUB-01, Rev-0	132kV Tower Type - "1D25", Detail Drawing of Stub & Cleat for Body Ext.+0M, +1.5M & +3M
(viii)	C870/1D25/STUB-02, Rev-0	132kV Tower Type - "1D25", Detail Drawing of Stub & Cleat for Body Ext.+6M & +9M
(ix)	C870/1D25/STUB-03, Rev-0	132kV Tower Type - "1D25", Detail Drawing of Stub & Cleat for Body Ext.+0M, +1.5M & +3M WITH +2.0M Raised Chimney
(x)	C870/1D25/STUB-02, Rev-0	132kV Tower Type - "1D25", Detail Drawing of Stub & Cleat for Body Ext. +6M & +9M WITH +2.0M Raised Chimney
(xi)	T2005-1D25-07, Rev-0	132kV Tower Type - 1D25, Adjustment Template
(xii)	T2005-1D25-08, Rev-0	132kV Tower Type - 1D25, E9 Body Ext. Template
(a)	Tower type 1DT6 Narrow base	

Item	Drawing Number	Title
(i)	T2005-1DT6-01, Rev. 0	132kV Tower Type – 1DT6, Top Part
(ii)	T2005-1DT6-02, Rev. 0	132kV Tower Type – 1DT6, Bottom Part
(iii)	T2005-1DT6-03, Rev. 0	132kV Tower Type – 1DT6, E0 Body
(iv)	T2005-1DT6-04, Rev. 0	132kV Tower Type – 1DT6, E1.5 Body
(v)	T2005-1DT6-05, Rev. 0	132kV Tower Type – 1DT6, E3 Body
(vi)	T2005-1DT6-06, Rev. 0	132kV Tower Type – 1DT6, E4.5 Body
(vii)	T2005-1DT6-07, Rev. 0	132kV Tower Type – 1DT6, E6 Body
(viii)	T2005-1DT6-08, Rev. 0	132kV Tower Type – 1DT6, E9 Body
(ix)	C870/1DT6/STUB-1, Rev.0	132kV Tower Type – 1DT6, Stub for Body Ext +0M, +1.5M, +3M, +4.5M, +6M, +9M
(x)	C870/1DT6/STUB-2, Rev.0	132kV Tower Type – 1DT6, Stub for Body Ext +0M, +1.5M, +3M, +4.5M, +6M, +9M with 2m RC.
1.2	**132kV Four Circuit Towers**	
(a)	Tower type 1QL	
(i)	DS-1607, Sheet 1 of 1	Outline diagram for 132kV M/C tangent tower (1QL)
(ii)	S-2288, sheet 1 of 1, Rev. 3	Structural drawing of Peak, Top X-Arm & X-Arm-4 & 3 of 1QL type tower
(iii)	S-2289, sheet 1 of 1, Rev. 3	X-Arm-1 & X-Arm-2 and bottom x-arm
(iv)	S-2290, sheet 1 of 1, Rev. 1	Cage-I
(v)	S-2291, sheet 1 of 1, Rev. 0	Cage-II
(vi)	S-2292, sheet 1 of 1, Rev. 0	Body-I
(vii)	S-2293, sheet 1 of 1, Rev. 0	Body-II
(viii)	S-2294, sheet 1 of 1, Rev. 0	+0m Extension and plan at 'B-B'
(ix)	S-2295, sheet 1 of 1, Rev. 0	+9m Extension
(x)	S-2296, sheet 1 of 1, Rev. 1	+0m Extension (view at 'F' and plan at 'A-A'
(xi)	S-2407, sheet 1 of 1, Rev. A	+1.5m Extension
(xii)	S-2408, sheet 1 of 1, Rev. 0	+3m Extension
(xiii)	S-2409, sheet 1 of 1, Rev. 0	+4.5m Extension
(xiv)	S-2410, sheet 1 of 1, Rev. 0	+6m Extension
(xv)	PGCB/GtoG/01/1QL/SD/01, Rev-1	Tower Type 1QL, Structural drawings for stub
(xvi)	PGCB/kfw-2.2/1QL/SD/01, Rev-0	Tower Type 1QL, Structural drawings for stub with 2m RC
(xvi)	A-5441, sheet 1 of 1,	General arrangement of ACD for all four circuit towers
(b)	Tower type 1Q15 (Not Applicable)	
(i)	DS-1674, Rev. E, Sheet 1 of 1	Outline diagram for 132kV M/C tension tower (1Q15)
(ii)	S-2308, sheet 1 of 1	Structural drawing of stub
(iii)	S-2310, sheet 1 of 1, Rev. D	Structural drawing of GW X-Arm & X-Arm-5 & 6 of 1Q15 type tower
(iv)	S-2311, sheet 1 of 1, Rev. C	X-Arm-3 & X-Arm-4
(v)	S-2312, sheet 1 of 1, Rev. D	X-Arm-1 & X-Arm-2
(vi)	S-2313, sheet 1 of 1, Rev. E	Cage-I
(vii)	S-2314, sheet 1 of 1, Rev. E	Cage-II
(viii)	S-2315, sheet 1 of 1, Rev. D	Body
(ix)	S-2316, sheet 1 of 1, Rev. D	Basic body with plan 'B-B'
(x)	S-2317, sheet 1 of 1, Rev. D	0-Base
(xi)	S-2318, sheet 1 of 1, Rev. D	+6m Extension (top part of +12m & +15m Extension)

Item	Drawing Number	Title
(xii)	S-2319, sheet 1 of 1, Rev. D	Plan view 'A-A' & Oblique view 'D'
(xiii)	S-2320, sheet 1 of 1, Rev. D	+15m Extension
(xiv)	S-2321, sheet 1 of 1, Rev. D	Plan view 'C-C' & Oblique view 'H'
(xv)	S-2441, sheet 1 of 1	+1.5m Extension
(xvi)	S-2442, sheet 1 of 1, Rev. A	+3m Extension
(xvii)	S-2443, sheet 1 of 1, Rev. A	+4.5m Extension
(xviii)	S-2444, sheet 1 of 1, Rev. A	+9m Extension
(xviv)	S-2445, sheet 1 of 1, Rev. A	+6m Extension (bottom part of +12m)
(xvv)	PGCB/GtoG/01/1Q15/SD/01, Rev-1	Tower Type 1Q15, Structural drawings for stub
(c)	Tower type 1Q30	
(i)	DS-1716, Rev. A, Sheet 1 of 1	Outline diagram for 132kV M/C tension tower (1Q30)
(ii)	S-2336, sheet 1 of 1, Rev. B	GW X-Arm & X-Arm-5 & 6
(iii)	S-2337, sheet 1 of 1, Rev. B	X-Arm-3 & X-Arm-4
(iv)	S-2338, sheet 1 of 1, Rev. B	X-Arm-1 & X-Arm-2
(v)	S-2339, sheet 1 of 1, Rev. B	Cage-I
(vi)	S-2340, sheet 1 of 1, Rev. B	Cage-II
(vii)	S-2341, sheet 1 of 1, Rev. A	Body
(viii)	S-2342, sheet 1 of 1, Rev. A	Basic body
(ix)	S-2343, sheet 1 of 1, Rev. B	Plan view "B-B" and oblique view "J & K"
(x)	S-2344, sheet 1 of 1, Rev. A	± 0 Base
(xi)	S-2345, sheet 1 of 1, Rev. A	+3m Extension with plan view "A-A" and oblique view "C"
(xii)	S-2346, sheet 1 of 1, Rev. A	+4.5m Extension with oblique view "D"
(xiii)	S-2347, sheet 1 of 1, Rev. A	+6m Extension with oblique view "E"
(xiv)	S-2348, sheet 1 of 1, Rev. A	+9m Extension with oblique view "F"
(xv)	PGCB/GtoG/01/1Q30/SD/01, Rev-1	Tower Type 1Q30, Structural drawings for stub
(xvi)	PGCB/kfw-2.2/1Q30/SD/01, Rev-0	Tower Type 1Q30, Structural drawings for stub with 2m RC
(d)	Tower type 1QT6	
(i)	DS-1735, Sheet 1 of 1	Outline diagram for 132kV M/C tension tower (1QT6)
(ii)	S-2395, Sheet 1 of 1, Rev. 2	Structural drawing of GW X-Arm & X-Arm-6 of 1QT6 type tower
(iii)	S-2396, Sheet 1 of 1, Rev. 3	X-Arm-4 & X-Arm-5
(iv)	S-2397, Sheet 1 of 1, Rev. 3	X-Arm-2 & X-Arm-3
(v)	S-2398, Sheet 1 of 1, Rev. 3	X-Arm-1
(vi)	S-2399, Sheet 1 of 1, Rev. 1	Cage-I
(vii)	S-2400, Sheet 1 of 1, Rev. 2	Cage-2
(viii)	S-2401, Sheet 1 of 1, Rev. 2	Body
(ix)	S-2402, Sheet 1 of 1, Rev. 0	Basic Body
(x)	S-2403, Sheet 1 of 1, Rev. 0	0 Base
(xi)	S-2404, Sheet 1 of 1, Rev. 0	+9M Extension
(xii)	S-2405, Sheet 1 of 1, Rev. 1	Plan A-A & B-B
(xiii)	S-2411	+1.5M Extension
(xiv)	S-2412	+3M Extension
(xv)	S-2413	+4.5M Extension
(xvi)	S-2414, Sheet 1 of 1, Rev. 0	+6M Extension

Item	Drawing Number	Title
(xvii)	S-2759, Sheet 1 of 1, Rev. 1	Aux. cross-arm GW & 6
(xviii)	S-2760, Sheet 1 of 1, Rev. 0	Aux. cross-arm 4 & 5
(xix)	S-2761, Sheet 1 of 1, Rev. 0	Aux. cross-arm 2 & 3
(xx)	S-2762, Sheet 1 of 1, Rev. 1	Aux. cross-arm 1
(xxi)	PGCB/GtoG/01/1QT6/SD/01, Rev-1	Tower Type 1QT6, Structural drawings for stub
(xxii)	PGCB/kfw-2.2/1QT6/SD/01, Rev-0	Tower Type 1QT6, Structural drawings for stub with 2m RC

Tower Type 2DT60				
SI.	**Description**	**Drawing No.**	**Sheet No.**	**Rev.**
1	230 kV D/C OHTL For Tower Type "2DT60" (25-60)º / (0-30)º MKD '2DT60' (Basic Body Part- M1 & M2)	C835/2DT60-07	(1 of 1)	0
2	230 kV D/C OHTL For Tower Type "2DT60" (25-60)º / (0-30)º MKD '2DT60' (Basic Body Part- M3 & M4)	C835/2DT60-08	(1 of 1)	0
3	230 kV D/C OHTL For Tower Type "2DT60" (25-60)º / (0-30)º MKD '2DT60' (Basic Body Part- M5 & M7)	C835/2DT60-09	(1 of 3)	0
4	230 kV D/C OHTL For Tower Type "2DT60" (25-60)º / (0-30)º MKD '2DT60' (Basic Body Part- M5 & M7)	C835/2DT60-09	(2 of 3)	0
5	230 kV D/C OHTL For Tower Type "2DT60" (25-60)º / (0-30)º MKD '2DT60' Basic Body Part- M5 & M7 (HIP Views)	C835/2DT60-09	(3 of 3)	0
6	230 kV D/C OHTL For Tower Type "2DT60" (25-60)º / (0-30)º MKD '2DT60' (Basic Body Part- M8 & M12)	C835/2DT60-10	(1 of 3)	0
7	230 kV D/C OHTL For Tower Type "2DT60" (25-60)º / (0-30)º MKD '2DT60' (Basic Body Part- M8 & M12)	C835/2DT60-10	(2 of 3)	0
8	230 kV D/C OHTL For Tower Type "2DT60" (25-60)º / (0-30)º MKD '2DT60' Basic Body Part- M8 & M12 (HIP Views)	C835/2DT60-10	(3 of 3)	0
9	230 kV D/C OHTL For Tower Type "2DT60" (25-60)º / (0-30)º MKD '2DT60' (Ground Wire Peak)	C835/2DT60-03	(1 of 1)	1
10	230 kV D/C OHTL For Tower Type "2DT60" (25-60)º / (0-30)º MKD '2DT60' (Top Cross Arms)	C835/2DT60-04	(1 of 1)	1
11	230 kV D/C OHTL For Tower Type "2DT60" (25-60)º / (0-30)º MKD '2DT60' (Middle Cross Arms)	C835/2DT60-05	(1 of 1)	1
12	230 kV D/C OHTL For Tower Type "2DT60" (25-60)º / (0-30)º MKD '2DT60' (Bottom Cross Arms)	C835/2DT60-06	(1 of 1)	1
13	230 kV D/C OHTL For Tower Type "2DT60" (25-60)º / (0-30)º MKD '2DT60' (Top Auxiliary Cross Arms)	C835/2DT60-15	(1 of 1)	1
14	230 kV D/C OHTL For Tower Type "2DT60" (25-60)º / (0-30)º MKD '2DT60' (Middle Auxiliary Cross Arms)	C835/2DT60-16	(1 of 1)	1
15	230 kV D/C OHTL For Tower Type "2DT60" (25-60)º / (0-30)º MKD '2DT60' (Bottom Auxiliary Cross Arms)	C835/2DT60-17	(1 of 1)	1

16	230 kV D/C OHTL For Tower Type "2DT60" (25-60)º / (0-30)º MKD '2DT60' Common Plan At BTB (View "P0-P0")	C835/2DT60-12	(1 of 1)	0
17	230 kV D/C OHTL For Tower Type "2DT60" (25-60)º / (0-30)º MKD '2DT60' Common Plan At Level-A (View "P1-P1")	C835/2DT60-13	(1 of 1)	0
18	230 kV D/C OHTL For Tower Type "2DT60" (25-60)º / (0-30)º MKD '2DT60' (+0.0M Body Extension)	C835/2DT60-11	(1 of 2)	0
19	230 kV D/C OHTL For Tower Type "2DT60" (25-60)º / (0-30)º MKD '2DT60' +0.0M Body Extension (HIP View)	C835/2DT60-11	(2 of 2)	0
20	230 kV D/C OHTL For Tower Type "2DT60" (25-60)º / (0-30)º MKD '2DT60' (+1.5M Body Extension)	C835/2DT60-18	(1 of 2)	0
21	230 kV D/C OHTL For Tower Type "2DT60" (25-60)º / (0-30)º MKD '2DT60' +1.5M Body Extension (View 1.5V1-1.5V1)	C835/2DT60-18	(2 of 2)	1
22	230 kV D/C OHTL For Tower Type "2DT60" (25-60)º / (0-30)º MKD '2DT60' (+3.0M Body Extension)	C835/2DT60-19	(1 of 2)	0
23	230 kV D/C OHTL For Tower Type "2DT60" (25-60)º / (0-30)º MKD '2DT60' (+3.0M Body Extension)	C835/2DT60-19	(2 of 2)	1
24	230 kV D/C OHTL For Tower Type "2DT60" (25-60)º / (0-30)º MKD '2DT60' (+4.5M Body Extension)	C835/2DT60-20	(1 of 2)	0
25	230 kV D/C OHTL For Tower Type "2DT60" (25-60)º / (0-30)º MKD '2DT60' +4.5M Body Extension (View 4.5V1-4.5V1)	C835/2DT60-20	(2 of 2)	1
26	230 kV D/C OHTL For Tower Type "2DT60" (25-60)º / (0-30)º MKD '2DT60' (+6.0M Body Extension)	C835/2DT60-21	(1 of 2)	0
27	230 kV D/C OHTL For Tower Type "2DT60" (25-60)º / (0-30)º MKD '2DT60' +6.0M Body Extension (View 6V1-6V1)	C835/2DT60-21	(2 of 2)	1
28	230 kV D/C OHTL For Tower Type "2DT60" (25-60)º / (0-30)º MKD '2DT60' (+9.0M Body Extension)	C835/2DT60-14	(1 of 2)	1
29	230 kV D/C OHTL For Tower Type "2DT60" (25-60)º / (0-30)º MKD '2DT60' +9.0M Body Extension (View 9V1-9V1)	C835/2DT60-14	(2 of 2)	1
30	Line and Clearance Diagram for Tower Type “2DT60”	C835/DES-4	Sheet 223, 224, 5 of 5 , 7 of 7	C
31	Detail Drawing of Stub & Cleat for Tower Type “2DT60”,	G461/2DT60-01	1 of 1	0
32	Detail Drawing of Stub & Cleat for Tower Type “2DT60” with 2m RC,	PGCB/kfw/P-1.2/2DT6/SD/02	1 of 1	1

230kV Four Circuit Towers:

Tower type 2QL			
Sl. No.	**DESCRIPTION**	**DRAWING NO.**	**REV.**
1	230kV 4/C OHTL – 2QL, Basic body-I	HGPT/PGCB/2QL/SD/201 Sheet 1 of 7	Rev. 2
2	230kV 4/C OHTL – 2QL, Basic body-II	HGPT/PGCB/2QL/SD/201 Sheet 2 of 7	Rev. 2
3	230kV 4/C OHTL – 2QL, Cage-I	HGPT/PGCB/2QL/SD/201 Sheet 3 of 7	Rev. 2
4	230kV 4/C OHTL – 2QL, Cage-II & Peak	HGPT/PGCB/2QL/SD/201 Sheet 4 of 7	Rev. 2
5	230kV 4/C OHTL – 2QL, 5th & 6th X-arm	HGPT/PGCB/2QL/SD/201 Sheet 5 of 7	Rev. 2
6	230kV 4/C OHTL – 2QL, 3rd & 4th X-arm	HGPT/PGCB/2QL/SD/201 Sheet 6 of 7	Rev. 2
7	230kV 4/C OHTL – 2QL, EW, Top & 2nd X-arm	HGPT/PGCB/2QL/SD/201 Sheet 7 of 7	Rev. 2
8	230kV D/C OHTL – 2QL, ±0M Body Extension	HGPT/PGCB/2QL/SD/202 Sheet 1 of 1	Rev. 2
9	230kV D/C OHTL – 2QL, ±1.5M Body Extension	HGPT/PGCB/2QL/SD/203 Sheet 1 of 1	Rev. 1
10	230kV D/C OHTL – 2QL, ±3M Body Extension	HGPT/PGCB/2QL/SD/204 Sheet 1 of 1	Rev. 2
11	230kV D/C OHTL – 2QL, ±4.5M Body Extension	HGPT/PGCB/2QL/SD/205 Sheet 1 of 1	Rev. 1
12	230kV D/C OHTL – 2QL, ±6M Body Extension	HGPT/PGCB/2QL/SD/206 Sheet 1 of 1	Rev. 2
13	230kV D/C OHTL – 2QL, ±9M Body Extension	HGPT/PGCB/2QL/SD/207 Sheet 1 of 1	Rev. 1
14	230kV D/C OHTL – 2QL, ±12M Body Extension	HGPT/PGCB/2QL/SD/208 Sheet 1 of 1	Rev. 1
15	STEP BOLT & SPIKE OF ANTI CLIMBING DEVICE	HGPT/PGCB/SB&SP/SD/209 Sheet 1 of 1	Rev. 0
16	DETAILED TOWER DESIGN FOR SUSPENSION TOWER TYPE "2QL"(0°-1°)	HGPT/PGCB/2QL/TD/101 Sheet 1 of 1	Rev. 3
17	Tower Type 2QL, Drawing of Stub & Cleat	361-2QL-S, Sheet 1 of 1	Rev-0
18	Tower Type 2QL, Drawing of Stub & Cleat with 2m RC	370-2QL-S2, Sheet 1 of 1	Rev-0

Tower type 2Q1			
Sl. No.	**DESCRIPTION**	**DRAWING NO.**	**REV.**
1	230kV 4/C OHTL – 2Q1, Basic body-I	HGPT/PGCB/2Q1/SD/211 Sheet 1 of 7	Rev. 1
2	230kV 4/C OHTL – 2Q1, Basic body-II	HGPT/PGCB/2Q1/SD/211 Sheet 2 of 7	Rev. 0
3	230kV 4/C OHTL – 2Q1, Cage-I	HGPT/PGCB/2Q1/SD/211 Sheet 3 of 7	Rev. 0
4	230kV 4/C OHTL – 2Q1, Cage-II & Peak	HGPT/PGCB/2Q1/SD/211 Sheet 4 of 7	Rev. 1
5	230kV 4/C OHTL – 2Q1, Bottom & Middle X-arm (Bottom Circuit)	HGPT/PGCB/2Q1/SD/211 Sheet 5 of 7	Rev. 0
6	230kV 4/C OHTL – 2Q1, Top & Bottom X-arm (Bottom & Top Circuit)	HGPT/PGCB/2Q1/SD/211 Sheet 6 of 7	Rev. 0
7	230kV 4/C OHTL – 2Q1, E.W., Top & Middle X-arm (Top Circuit)	HGPT/PGCB/2Q1/SD/211 Sheet 7 of 7	Rev. 0
8	230kV D/C OHTL – 2Q1, ±0M Body Extension	HGPT/PGCB/2Q1/SD/212 Sheet 1 of 1	Rev. 1
9	230kV D/C OHTL – 2Q1, ±1.5M Body Extension	HGPT/PGCB/2Q1/SD/213 Sheet 1 of 1	Rev. 0
10	230kV D/C OHTL – 2Q1, ±3M Body Extension	HGPT/PGCB/2Q1/SD/214 Sheet 1 of 1	Rev. 1
11	230kV D/C OHTL – 2Q1, ±6M Body Extension	HGPT/PGCB/2Q1/SD/215 Sheet 1 of 1	Rev. 0
12	230kV D/C OHTL – 2Q1, ±9M Body Extension	HGPT/PGCB/2Q1/SD/216 Sheet 1 of 1	Rev. 0
13	230kV D/C OHTL – 2Q1, ±12M Body Extension	HGPT/PGCB/2Q1/SD/217 Sheet 1 of 2	Rev. 0
14	230kV D/C OHTL – 2Q1, ±12M Body Extension	HGPT/PGCB/2Q1/SD/217 Sheet 2 of 2	Rev. 0
15	230kV D/C OHTL – 2Q1, ±15M Body Extension	HGPT/PGCB/2Q1/SD/218 Sheet 1 of 2	Rev. 0
16	230kV D/C OHTL – 2Q1, ±15M Body Extension	HGPT/PGCB/2Q1/SD/218 Sheet 2 of 2	Rev. 0

17	230kV D/C OHTL – 2Q1, ±18M Body Extension	HGPT/PGCB/2Q1/SD/219 Sheet 1 of 2	Rev. 0
18	230kV D/C OHTL – 2Q1, ±18M Body Extension	HGPT/PGCB/2Q1/SD/219 Sheet 2 of 2	Rev. 0
19	230kV D/C OHTL – 2Q1, ±21M Body Extension	HGPT/PGCB/2Q1/SD/220 Sheet 1 of 2	Rev. 0
20	230kV D/C OHTL – 2Q1, ±21M Body Extension	HGPT/PGCB/2Q1/SD/220 Sheet 2 of 2	Rev. 0
21	230kV D/C OHTL – 2Q1, ±25M Body Extension	HGPT/PGCB/2Q1/SD/221 Sheet 1 of 2	Rev. 0
22	230kV D/C OHTL – 2Q1, ±25M Body Extension	HGPT/PGCB/2Q1/SD/221 Sheet 2 of 2	Rev. 0
23	DETAILED TOWER DESIGNFOR FOUR CIRCUIT TOWER TYPE "2Q1"(0°-3°)	HGPT/PGCB/2Q1/TD/102 Sheet 1 of 2	Rev. 4
24	DETAILED TOWER DESIGNFOR FOUR CIRCUIT TOWER TYPE "2Q1"(0°-3°)	HGPT/PGCB/2Q1/TD/102 Sheet 2 of 2	Rev. 3
25	STEP BOLT & SPIKE OF ANTI CLIMBING DEVICE	HGPT/PGCB/SB&SP/SD/209 Sheet 1 of 1	Rev. 0
26	Tower Type 2Q1, Drawing of Stub & Cleat	361-2Q1-S, Sheet No 1 of 1	Rev.0
27	Tower Type 2Q1, Drawing of Stub & Cleat with 2m RC	361-2Q1-S-2RC, Sheet No 1 of 1	Rev.0

Tower type 2Q15			
S.NO	**DESCRIPTION**	**DRAWING NO.**	**REVISION**
1	230kV 4/C OHTL – 2Q15, Basic body-I	HGPT/PGCB/2Q15/SD/231 Sheet 1 of 8	Rev. 1
2	230kV 4/C OHTL – 2Q15, Basic body-II	HGPT/PGCB/2Q15/SD/231 Sheet 2 of 8	Rev. 1
3	230kV 4/C OHTL – 2Q15, Cage-I	HGPT/PGCB/2Q15/SD/231 Sheet 3 of 8	Rev. 0
4	230kV 4/C OHTL – 2Q15, Cage-II	HGPT/PGCB/2Q15/SD/231 Sheet 4 of 8	Rev. 2
5	230kV 4/C OHTL – 2Q15, Cage & Peak	HGPT/PGCB/2Q15/SD/231 Sheet 5 of 8	Rev. 0
6	230kV 4/C OHTL – 2Q15, Bottom & Middle X-arm (Bottom Circuit)	HGPT/PGCB/2Q15/SD/231 Sheet 6 of 8	Rev. 0

7	230kV 4/C OHTL – 2Q15, Top & Bottom X-arm (Bottom & Top Circuit)	HGPT/PGCB/2Q15/SD/231 Sheet 7 of 8	Rev. 0
8	230kV 4/C OHTL – 2Q15, E.W., Top & Middle X-arm (Top Circuit)	HGPT/PGCB/2Q15/SD/231 Sheet 8 of 8	Rev. 1
9	230kV D/C OHTL – 2Q15, ±0M Body Extension	HGPT/PGCB/2Q15/SD/232 Sheet 1 of 1	Rev. 1
10	230kV D/C OHTL – 2Q15, ±1.5M Body Extension	HGPT/PGCB/2Q15/SD/233 Sheet 1 of 1	Rev. 1
11	230kV D/C OHTL – 2Q15, ±3M Body Extension	HGPT/PGCB/2Q15/SD/234 Sheet 1 of 1	Rev. 1
12	230kV D/C OHTL – 2Q15, ±6M Body Extension	HGPT/PGCB/2Q15/SD/235 Sheet 1 of 1	Rev. 1
13	230kV D/C OHTL – 2Q15, ±9M Body Extension	HGPT/PGCB/2Q15/SD/236 Sheet 1 of 1	Rev. 1
14	DETAILED TOWER DESIGN FOR SUSPENSION TOWER TYPE "2Q15"(0°-15°)	HGPT/PGCB/2Q15/TD/103 Sheet 1 of 1	Rev. 4
15	Tower Type 2Q15, Drawing of Stub & Cleat	PGCB-ESPNERP/P2-CO-D/T-094	Rev.A
16	Tower Type 2Q15, Drawing of Stub & Cleat with 2m RC	PGCB-ESPNERP/P2-CO-D/T-094	Rev.B

Tower type 2Q30			
S.NO	**DESCRIPTION**	**DRAWING NO.**	**REVISION**
1	230kV 4/C OHTL – 2Q30, Basic body-I	HGPT/PGCB/2Q30/SD/241 Sheet 1 of 8	Rev. 1
2	230kV 4/C OHTL – 2Q30, Basic body-II	HGPT/PGCB/2Q30/SD/241 Sheet 2 of 8	Rev. 2
3	230kV 4/C OHTL – 2Q30, Cage-I	HGPT/PGCB/2Q30/SD/241 Sheet 3 of 8	Rev. 1
4	230kV 4/C OHTL – 2Q30, Cage-II	HGPT/PGCB/2Q30/SD/241 Sheet 4 of 8	Rev. 2
5	230kV 4/C OHTL – 2Q30, Cage & Peak	HGPT/PGCB/2Q30/SD/241 Sheet 5 of 8	Rev. 2
6	230kV 4/C OHTL – 2Q30, Bottom & Middle X-arm (Bottom Circuit)	HGPT/PGCB/2Q30/SD/241 Sheet 6 of 8	Rev. 1
7	230kV 4/C OHTL – 2Q30, Top & Bottom X-arm (Bottom & Top Circuit)	HGPT/PGCB/2Q30/SD/241 Sheet 7 of 8	Rev. 1
8	230kV 4/C OHTL – 2Q30, E.W., Top & Middle X-arm (Top Circuit)	HGPT/PGCB/2Q30/SD/241 Sheet 8 of 8	Rev. 1
9	230kV D/C OHTL – 2Q30, ±0M Body Extension	HGPT/PGCB/2Q30/SD/242 Sheet 1 of 1	Rev. 1

10	230kV D/C OHTL – 2Q30, ±1.5M Body Extension	HGPT/PGCB/2Q30/SD/243 Sheet 1 of 1	Rev. 2
11	230kV D/C OHTL – 2Q30, ±3M Body Extension	HGPT/PGCB/2Q30/SD/244 Sheet 1 of 1	Rev. 2
12	230kV D/C OHTL – 2Q30, ±4.5M Body Extension	HGPT/PGCB/2Q30/SD/245 Sheet 1 of 1	Rev. 3
13	230kV D/C OHTL – 2Q30, ±6M Body Extension	HGPT/PGCB/2Q30/SD/246 Sheet 1 of 1	Rev. 2
14	230kV D/C OHTL – 2Q30, ±9M Body Extension	HGPT/PGCB/2Q30/SD/247 Sheet 1 of 1	Rev. 2
15	DETAILED TOWER DESIGN FOR SUSPENSION TOWER TYPE "2Q30"(0°-30°)	HGPT/PGCB/2Q30/TD/404 Sheet 1 of 1	Rev. 5
16	STEP BOLT & SPIKE OF ANTI CLIMBING DEVICE	HGPT/PGCB/SB&SP/SD/209 Sheet 1 of 1	Rev. 0
17	Tower Type 2Q30, Drawing of Stub & Cleat	361-2Q30-S, Sheet No 1 of 1	Rev. 0
18	Tower Type 2Q30, Drawing of Stub & Cleat with 2m RC	361-2Q30-2RC, Sheet No 1 of 1	Rev. 0

Tower type 2QT6			
S.NO	**DESCRIPTION**	**DRAWING NO.**	**REVISION**
1	230kV 4/C OHTL – 2QT6, Basic body-I	HGPT/PGCB/2QT6/SD/251 Sheet 1 of 10	Rev. 2
2	230kV 4/C OHTL – 2QT6, Basic body-II	HGPT/PGCB/2QT6/SD/251 Sheet 2 of 10	Rev. 2
3	230kV 4/C OHTL – 2QT6, Cage-I	HGPT/PGCB/2QT6/SD/251 Sheet 3 of 10	Rev. 1
4	230kV 4/C OHTL – 2QT6, Cage-II	HGPT/PGCB/2QT6/SD/251 Sheet 4 of 10	Rev. 3
5	230kV 4/C OHTL – 2QT6, Cage & Peak	HGPT/PGCB/2QT6/SD/251 Sheet 5 of 10	Rev. 2
6	230kV 4/C OHTL – 2QT6, Bottom X-arm (Bottom Circuit)	HGPT/PGCB/2QT6/SD/251 Sheet 6 of 10	Rev. 1
7	230kV 4/C OHTL – 2QT6, Middle X-arm (Bottom Circuit)	HGPT/PGCB/2QT6/SD/251 Sheet 7 of 10	Rev. 1
8	230kV 4/C OHTL – 2QT6, Top X-arm (Bottom Circuit)	HGPT/PGCB/2QT6/SD/251 Sheet 8 of 10	Rev. 2
9	230kV 4/C OHTL – 2QT6, Bottom & Middle X-arm (Top Circuit)	HGPT/PGCB/2QT6/SD/251 Sheet 9 of 10	Rev. 1

10	230kV 4/C OHTL – 2QT6, Top & EW X-arm (Top Circuit)	HGPT/PGCB/2QT6/SD/251 Sheet 10 of 10	Rev. 2
11	230kV D/C OHTL – 2QT6, ±0M Body Extension	HGPT/PGCB/2QT6/SD/252 Sheet 1 of 1	Rev. 2
12	230kV D/C OHTL – 2QT6, ±1.5M Body Extension	HGPT/PGCB/2QT6/SD/253 Sheet 1 of 1	Rev. 2
13	230kV D/C OHTL – 2QT6, ±3M Body Extension	HGPT/PGCB/2QT6/SD/254 Sheet 1 of 1	Rev. 2
14	230kV D/C OHTL – 2QT6, ±4.5M Body Extension	HGPT/PGCB/2QT6/SD/255 Sheet 1 of 1	Rev. 2
15	230kV D/C OHTL – 2QT6, ±6M Body Extension	HGPT/PGCB/2QT6/SD/256 Sheet 1 of 1	Rev. 2
16	230kV D/C OHTL – 2QT6, ±9M Body Extension	HGPT/PGCB/2QT6/SD/257 Sheet 1 of 1	Rev. 2
17	230kV 4/C OHTL – 2QT6, Auxiliary Top X-arm (Top Circuit)	HGPT/PGCB/2QT6/SD/258 Sheet 1 of 1	Rev. 1
18	230kV 4/C OHTL – 2QT6, Auxiliary Middle X-arm (Top Circuit)	HGPT/PGCB/2QT6/SD/259 Sheet 1 of 1	Rev. 1
19	230kV 4/C OHTL – 2QT6, Auxiliary Bottom X-arm (Top Circuit)	HGPT/PGCB/2QT6/SD/260 Sheet 1 of 1	Rev. 1
20	230kV 4/C OHTL – 2QT6, Auxiliary Top X-arm (Bottom Circuit)	HGPT/PGCB/2QT6/SD/261 Sheet 1 of 1	Rev. 1
21	230kV 4/C OHTL – 2QT6, Auxiliary Middle X-arm (Bottom Circuit)	HGPT/PGCB/2QT6/SD/262 Sheet 1 of 1	Rev. 1
22	230kV 4/C OHTL – 2QT6, Auxiliary Bottom X-arm (Bottom Circuit)	HGPT/PGCB/2QT6/SD/263 Sheet 1 of 1	Rev. 1
23	DETAILED TOWER DESIGN FOR FOUR CIRCUIT/TERMINAL TOWER TYPE "2QT6"(30°-60°)	HGPT/PGCB/2QT6/TD/105 Sheet 1 of 2	Rev. 4
24	DETAILED TOWER DESIGN FOR FOUR CIRCUIT/TERMINAL TOWER TYPE "2QT6"(30°-60°)	HGPT/PGCB/2QT6/TD/105 Sheet 2 of 2	Rev. 3
25	Tower Type 2QT6, Drawing of Stub & Cleat	361-2QT6-S, Sheet No 1 of 1	Rev. 0
26	Tower Type 2QT6, Drawing of Stub & Cleat with 2m RC	361-2QT6-S2RC, Sheet No 1 of 1	Rev. 0

22.1.1 Drawings for 132kV Transmission Lines

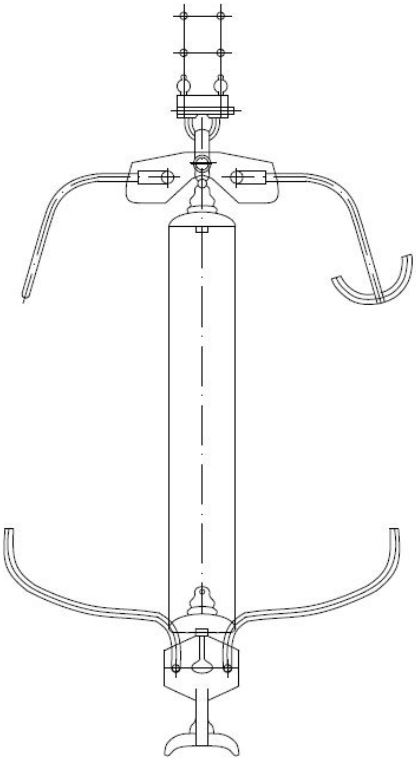

Suspension Set (Overland Potion)

Tender Purpose Only

Power Grid Company of Bangladesh Limited	Drawing No. PGCB/132kV/SS
	Title : Typical Drawing for Suspension Set - overhead line

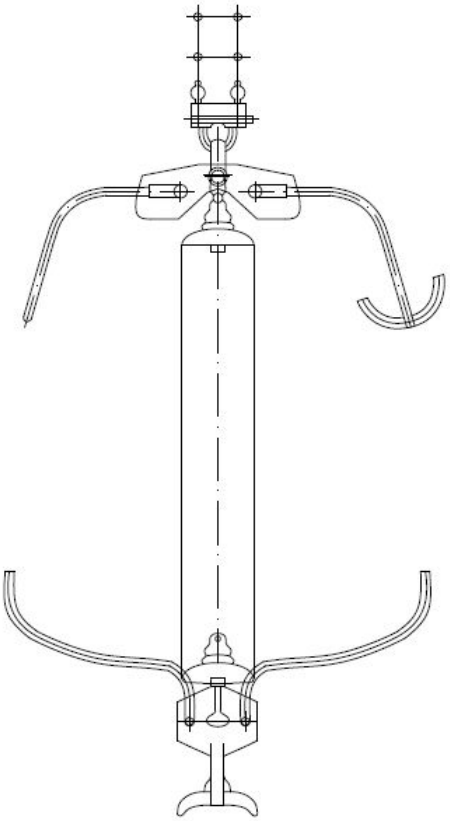

Heavy Suspension Set (Overland Potion)

Tender Purpose Only

Power Grid Company of Bangladesh Limited	Drawing No. PGCB/132kV/HS
	Title : Typical Drawing for Heavy Suspension Set - overhead line

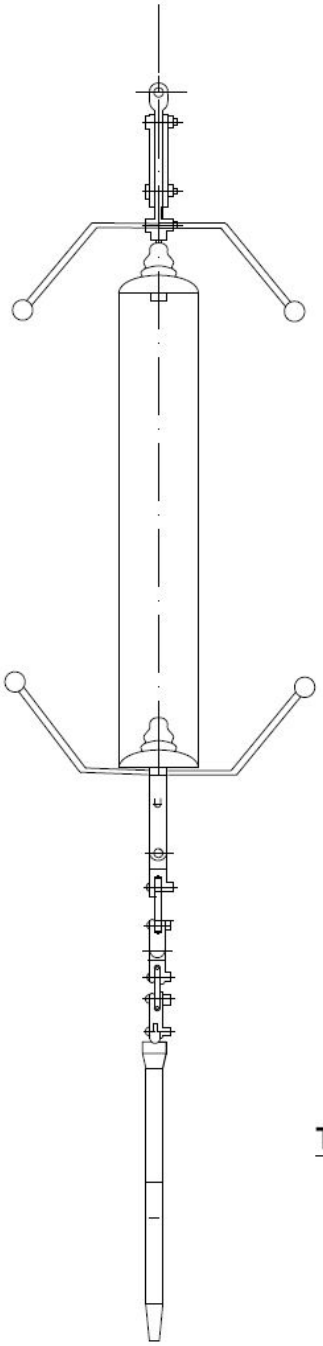

Tension Insulator Set (Overland Potion)

Tender Purpose Only

Power Grid Company of Bangladesh Limited	Drawing No. PGCB/132kV/TS
	Title : Typical Drawing for Tension Set - overhead line

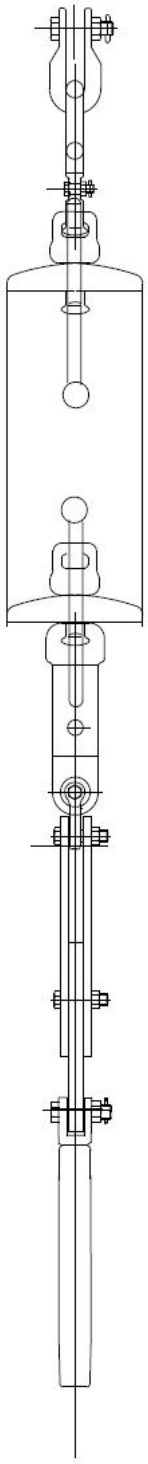

Upright Low Duty
Tension Insulator Set

Tender Purpose Only

Power Grid Company of Bangladesh Limited	Drawing No. PGCB/132kV/ULD
	Title : Typical Drawing for 132kV Upright Low Duty Tension Set

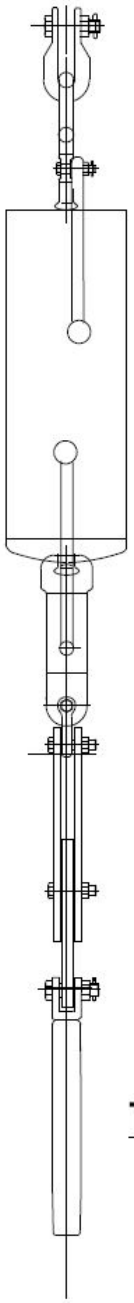

Inverted Low Duty Tension Insulator Set

Tender Purpose Only

Power Grid Company of Bangladesh Limited	Drawing No. PGCB/132kV/ILD
	Title : Typical Drawing for 132kV Inverted Low Duty Tension Set

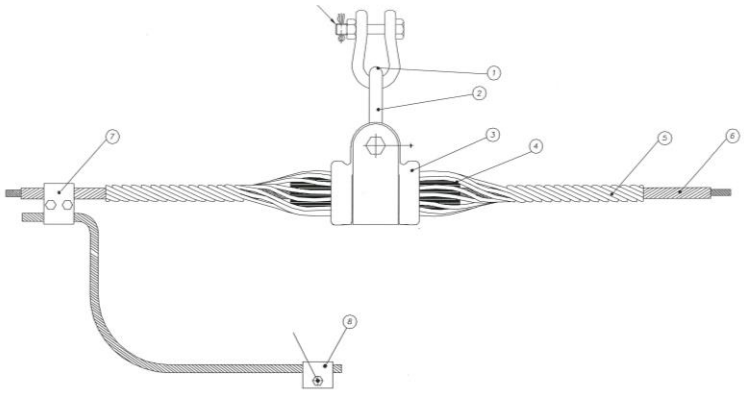

Typical Drawing of OPGW Suspension Set (Tender Purpose Only)

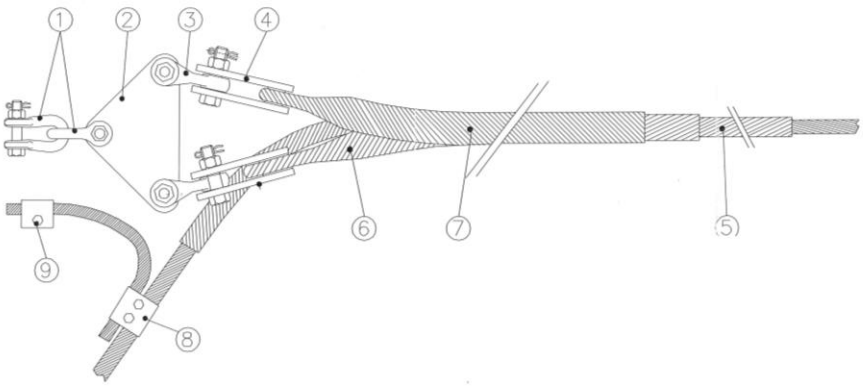

Typical Drawing of OPGW Tension Set (Tender Purpose Only)

22.1.2 Drawings for 230kV Transmission Lines

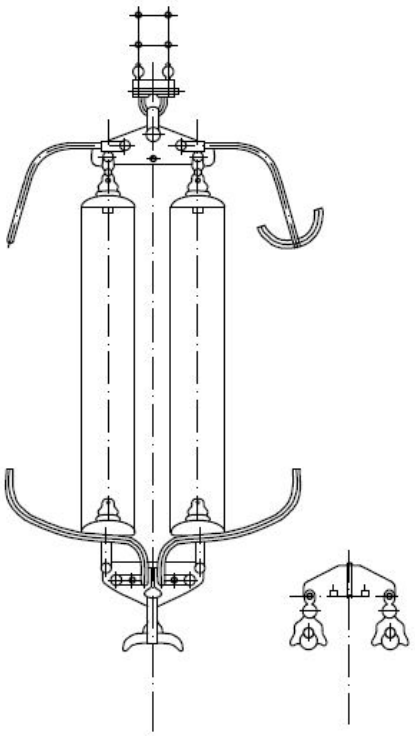

Suspension Set (Overland Potion)

Tender Purpose Only

Power Grid Company of Bangladesh Limited	Drawing No. PGCB/230kV/SS
	Title : Typical Drawing for Suspension Set - overhead line

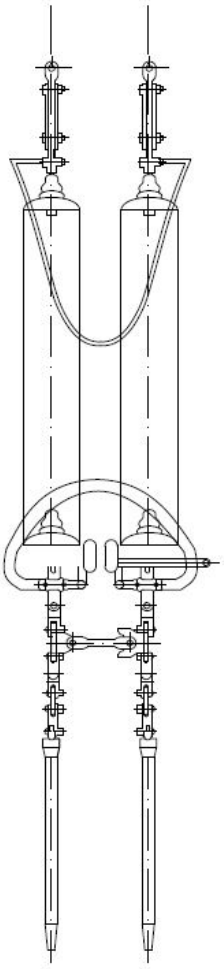

Tension Insulator Set (Overland Potion)

Tender Purpose Only

Power Grid Company of Bangladesh Limited	Drawing No. PGCB/230kV/TS
	Title : Typical Drawing for Tension Set - overhead line

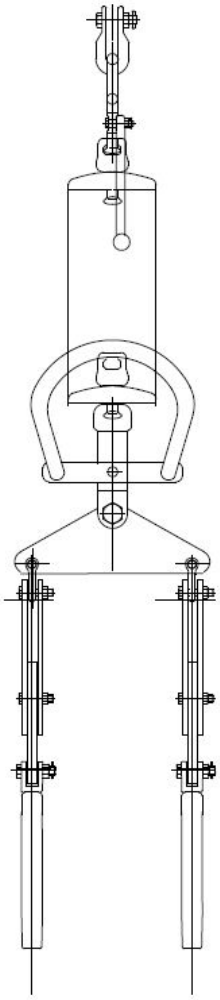

Upright Low DutyTension Insulator Set

Tender Purpose Only

Power Grid Company of Bangladesh Limited	Drawing No. PGCB/230kV/ULD
	Title : Typical Drawing for 400kV Upright Low Duty Tension Set

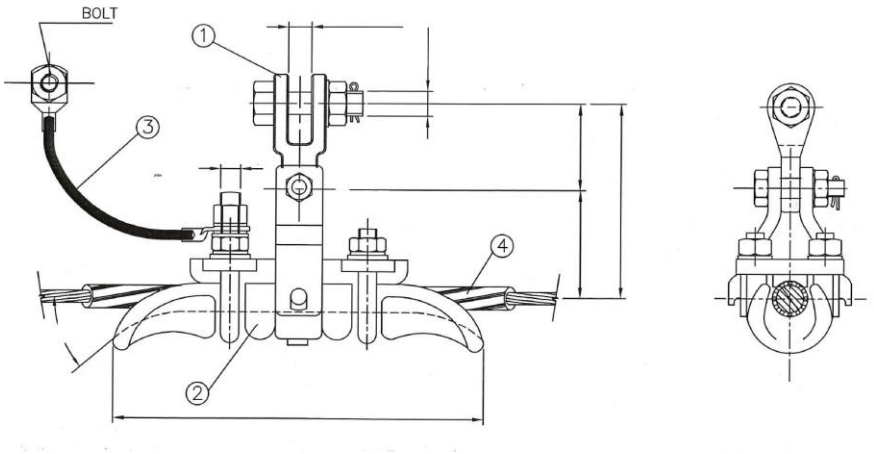

Typical Drawing of Earthwire Suspension Set (Tender Purpose Only)

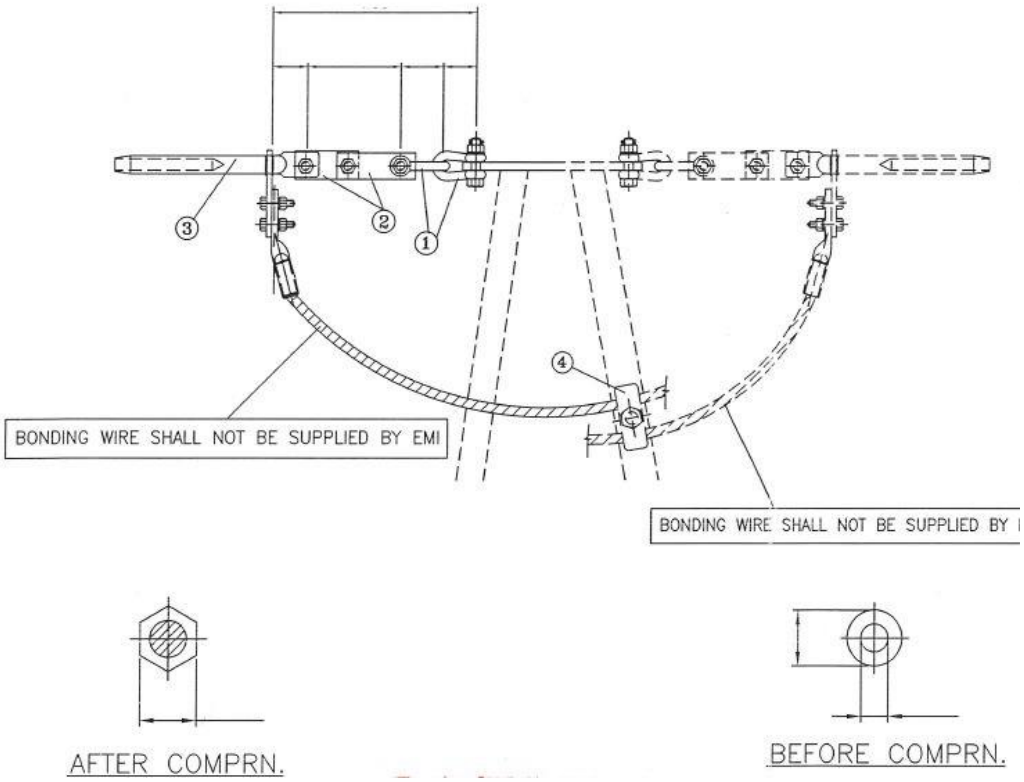

Typical Drawing of Earthwire Tension Set (Tender Purpose Only)

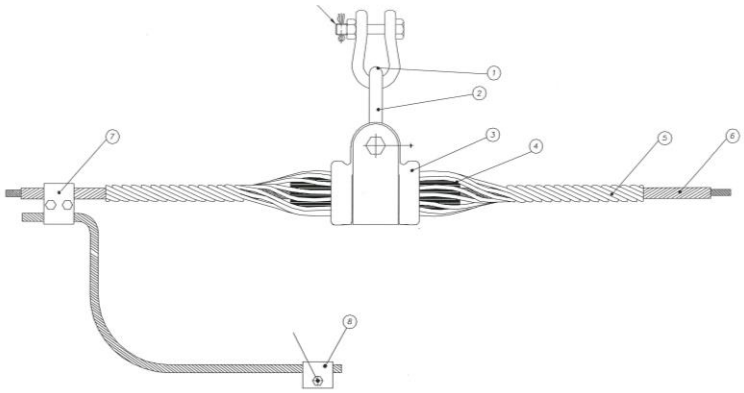

Typical Drawing of OPGW Suspension Set (Tender Purpose Only)

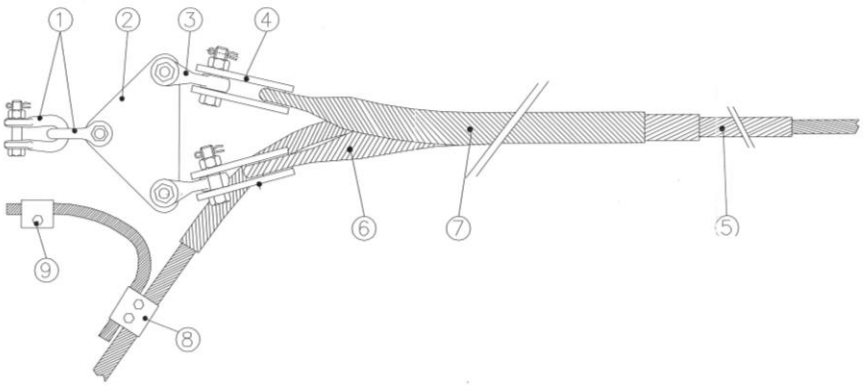

Typical Drawing of OPGW Tension Set (Tender Purpose Only)

22.1.4 Insulators

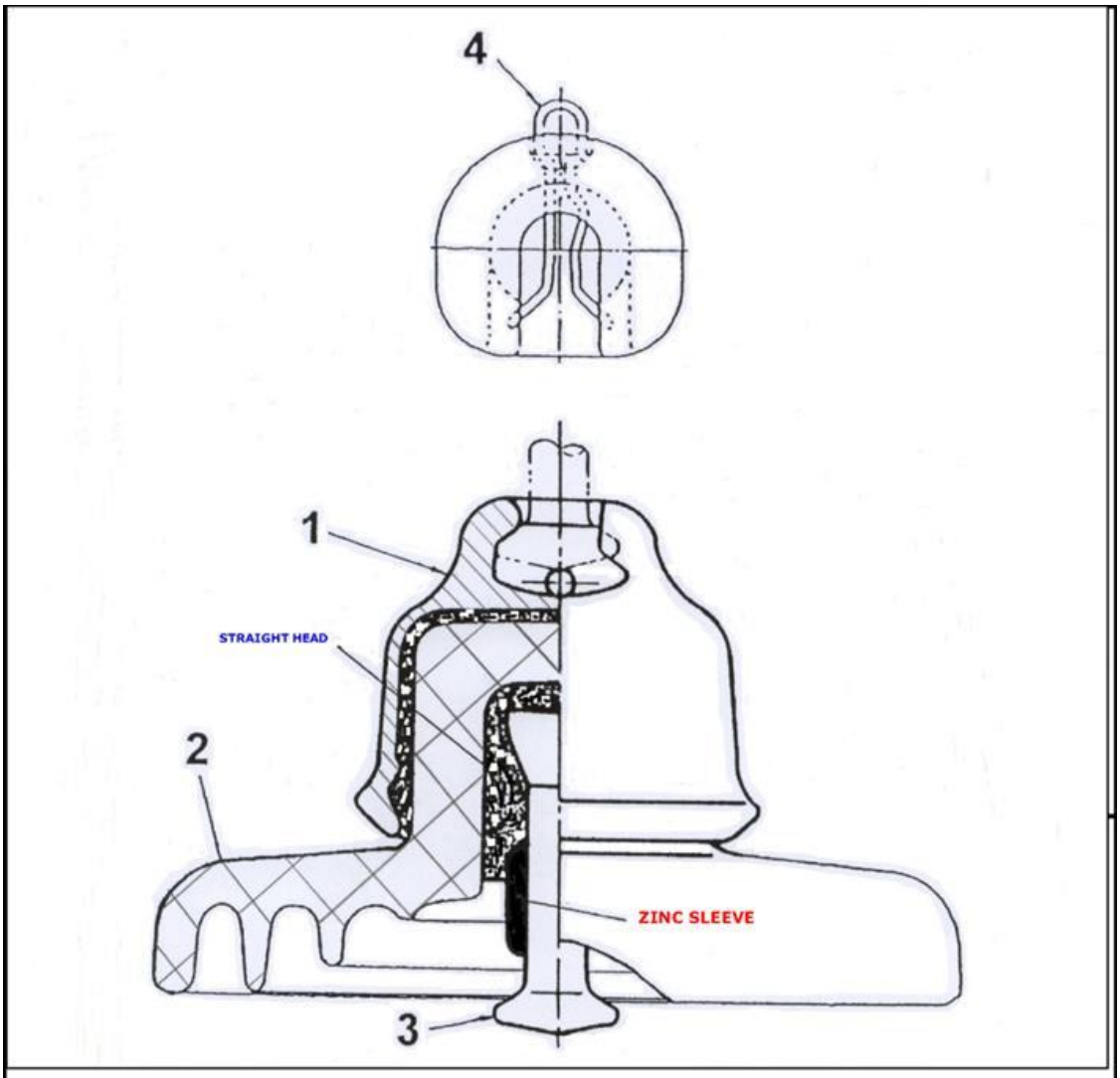

1. CAP
2. PORCELAIN DISC
3. PIN
4. SECURITY CLIP

NOTE: BITUMINOUS PAINT COATING METAL SURFACES IN CONTACT WITH CEMENT

	Employer: Power Grid Company of Bangladesh Ltd.(PGCB)						
				TYPICAL DRAWING FOR INSULATOR SHOWING ZINC SLEEVE & STRAIGHT HEAD			
Designed by		Approved by		Catalogue No.:			
Verified by		Date		Drawing No.	PGCB/TL/INS	Weight(kg)	

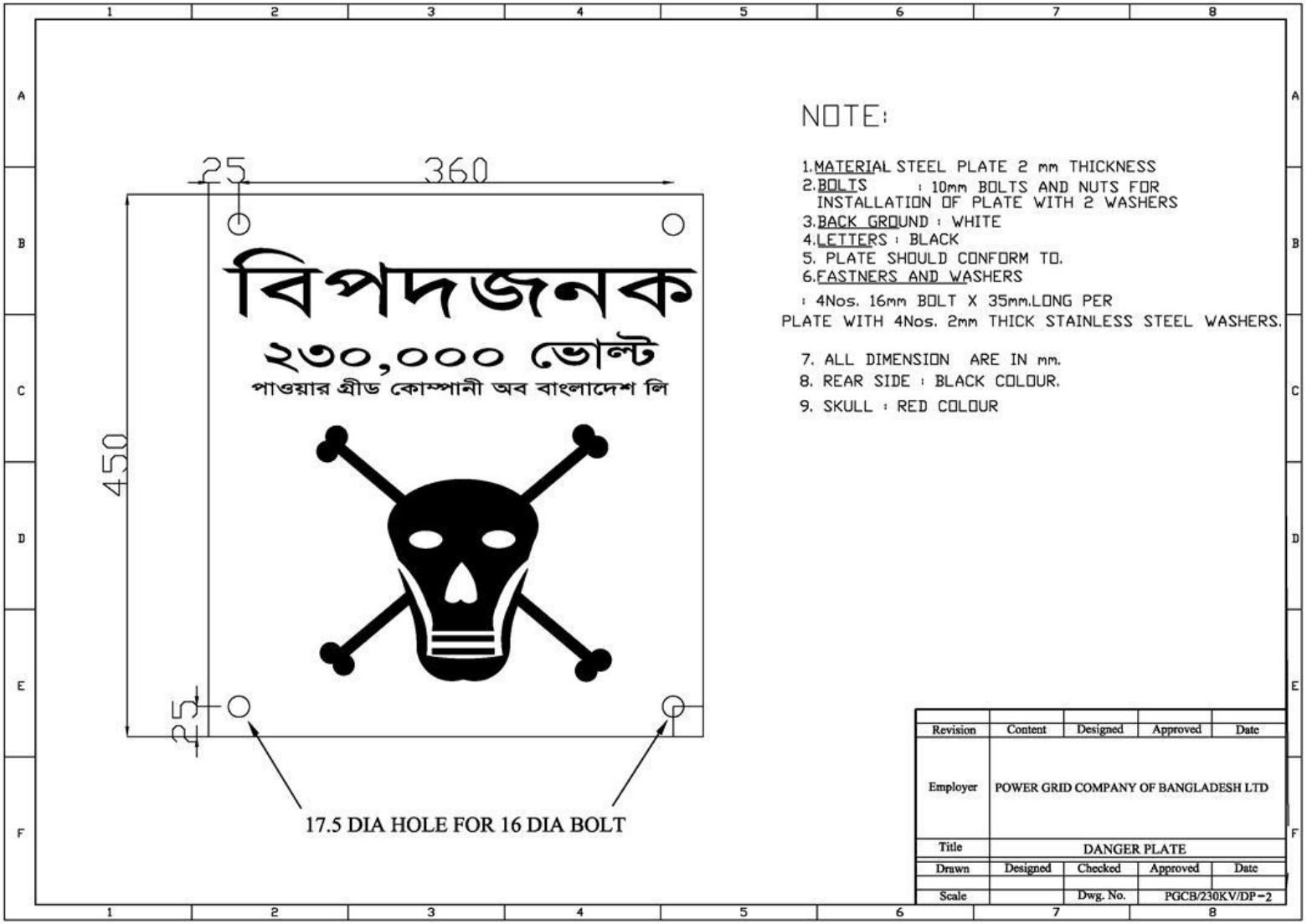
25
360
450
25
বিপদজনক
২৩০,০০০ ভোল্ট
পাওয়ার গ্রীড কোম্পানী অব বাংলাদেশ লি
17.5 DIA HOLE FOR 16 DIA BOLT
NOTE:
1.MATERIAL STEEL PLATE 2 mm THICKNESS
2.BOLTS : 10mm BOLTS AND NUTS FOR INSTALLATION OF PLATE WITH 2 WASHERS
3.BACK GROUND : WHITE
4.LETTERS : BLACK
5. PLATE SHOULD CONFORM TO.
6.FASTNERS AND WASHERS
: 4Nos. 16mm BOLT X 35mm.LONG PER PLATE WITH 4Nos. 2mm THICK STAINLESS STEEL WASHERS.
7. ALL DIMENSION ARE IN mm.
8. REAR SIDE : BLACK COLOUR.
9. SKULL : RED COLOUR
Revision
Content
Designed
Approved
Date
Employer
POWER GRID COMPANY OF BANGLADESH LTD
Title
DANGER PLATE
Drawn
Designed
Checked
Approved
Date
Scale
Dwg. No.
PGCB/230KV/DP-2

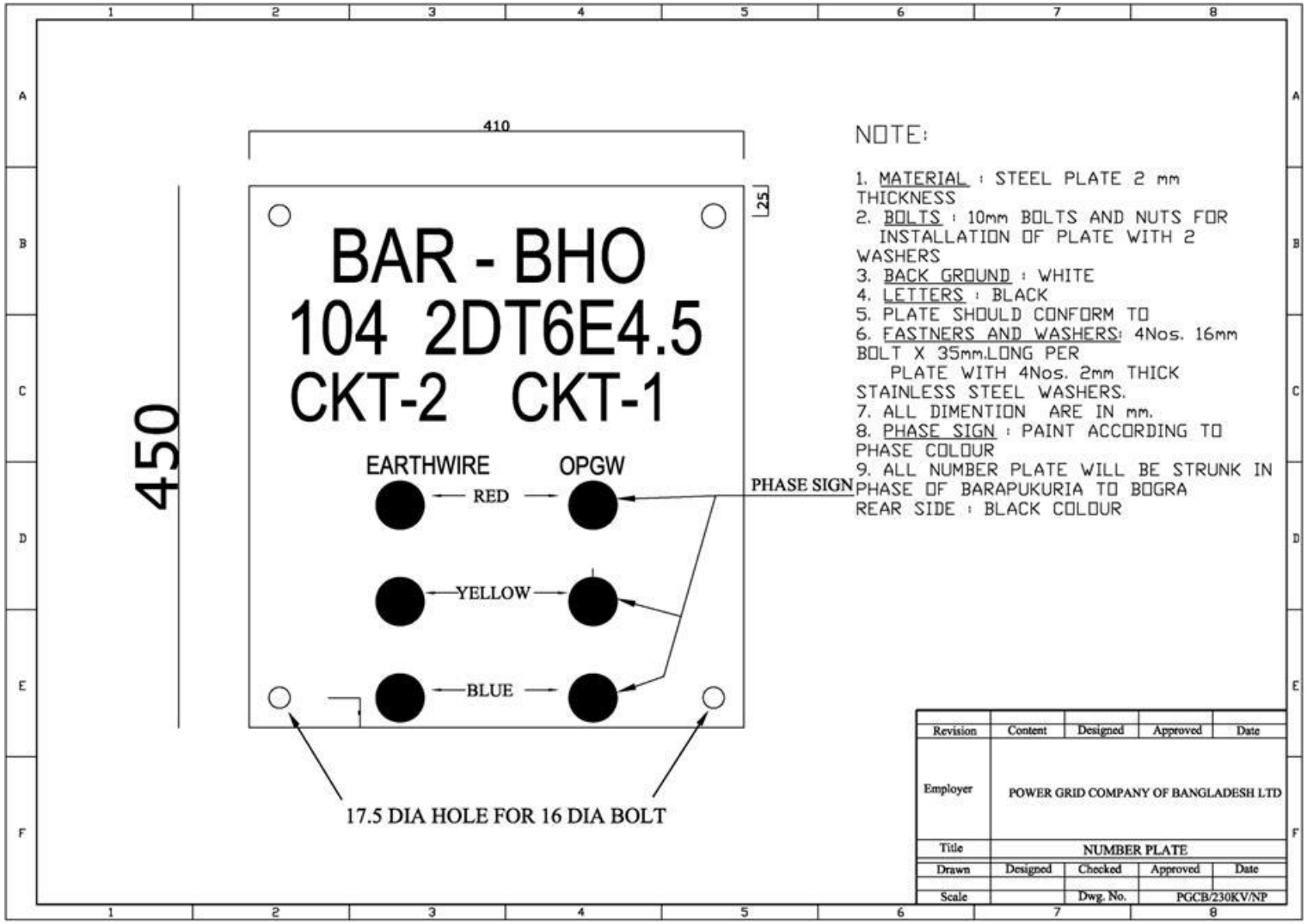
410
450
25
BAR - BHO
104 2DT6E4.5
CKT-2 CKT-1
EARTHWIRE
OPGW
RED
YELLOW
BLUE
PHASE SIGN
17.5 DIA HOLE FOR 16 DIA BOLT
NOTE:
1. MATERIAL : STEEL PLATE 2 mm THICKNESS
2. BOLTS : 10mm BOLTS AND NUTS FOR INSTALLATION OF PLATE WITH 2 WASHERS
3. BACK GROUND : WHITE
4. LETTERS : BLACK
5. PLATE SHOULD CONFORM TO
6. FASTNERS AND WASHERS: 4Nos. 16mm BOLT X 35mm.LONG PER PLATE WITH 4Nos. 2mm THICK STAINLESS STEEL WASHERS.
7. ALL DIMENTION ARE IN mm.
8. PHASE SIGN : PAINT ACCORDING TO PHASE COLOUR
9. ALL NUMBER PLATE WILL BE STRUNK IN PHASE OF BARAPUKURIA TO BOGRA
REAR SIDE : BLACK COLOUR
Revision
Content
Designed
Approved
Date
Employer
POWER GRID COMPANY OF BANGLADESH LTD
Title
NUMBER PLATE
Drawn
Designed
Checked
Approved
Date
Scale
Dwg. No.
PGCB/230KV/NP

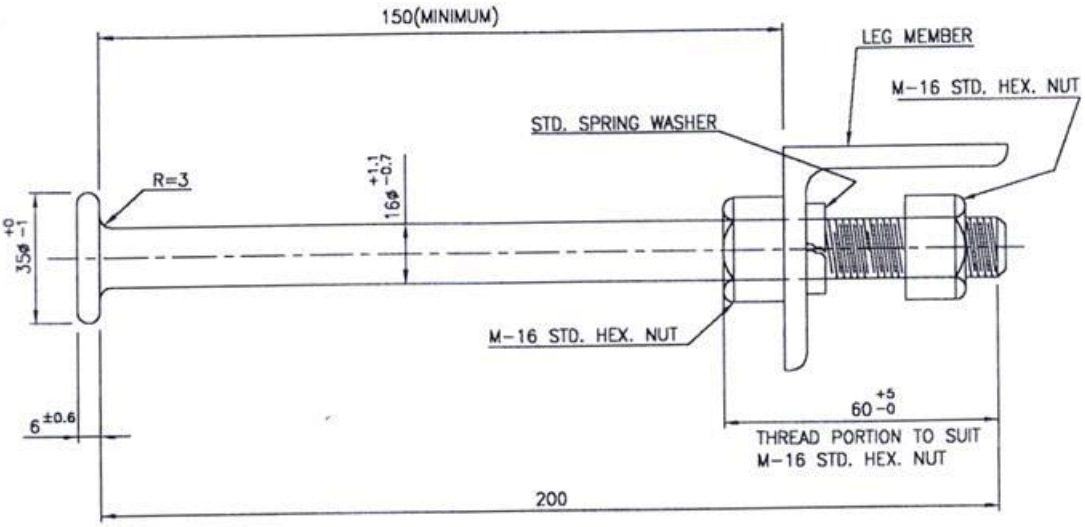

NOTES :

1. ALL DIMENSIONS ARE IN MM.
2. REFER TO SPECIFICATION FOR DETAILS
3. STEP-BOLT & NUTS TO BE GALVANISED AS PER BS:729.
4. NUT SHALL BE HEXAGONAL & SHALL BE AS PER IS:1363.
5. NUTS SHALL BE OF CLASS-5 CONFORMING TO IS:1367.
6. STEP-BOLT SHALL BE CAPABLE OF WITHSTANDING A VERTICAL LOAD OF NOT LES THAN 1.5KN.
7. STEEL FOR STEP BOLTS & NUTS SHALL BE GRADE S275JR.

Drawing No. POWER GRID/SB

Title: Step Bolt

NOTES:

1. DIMENSION OF 'X' WILL BE DECIDED AT SITE AS PER SITE CONDITION
2. TO ENSURE THERE IS NO BIMETALLIC CORROSION THE COPPER LEG SHOULD BE TINNED
3. EARTHING ARRANGEMENT SHOULD BE CONNECTED FOR TWO DIAGONALS OF EACH TOWER
4. PLEASE REFER TO CHAPTER 8 FOR DETAILS OF TOWER EARTHING.

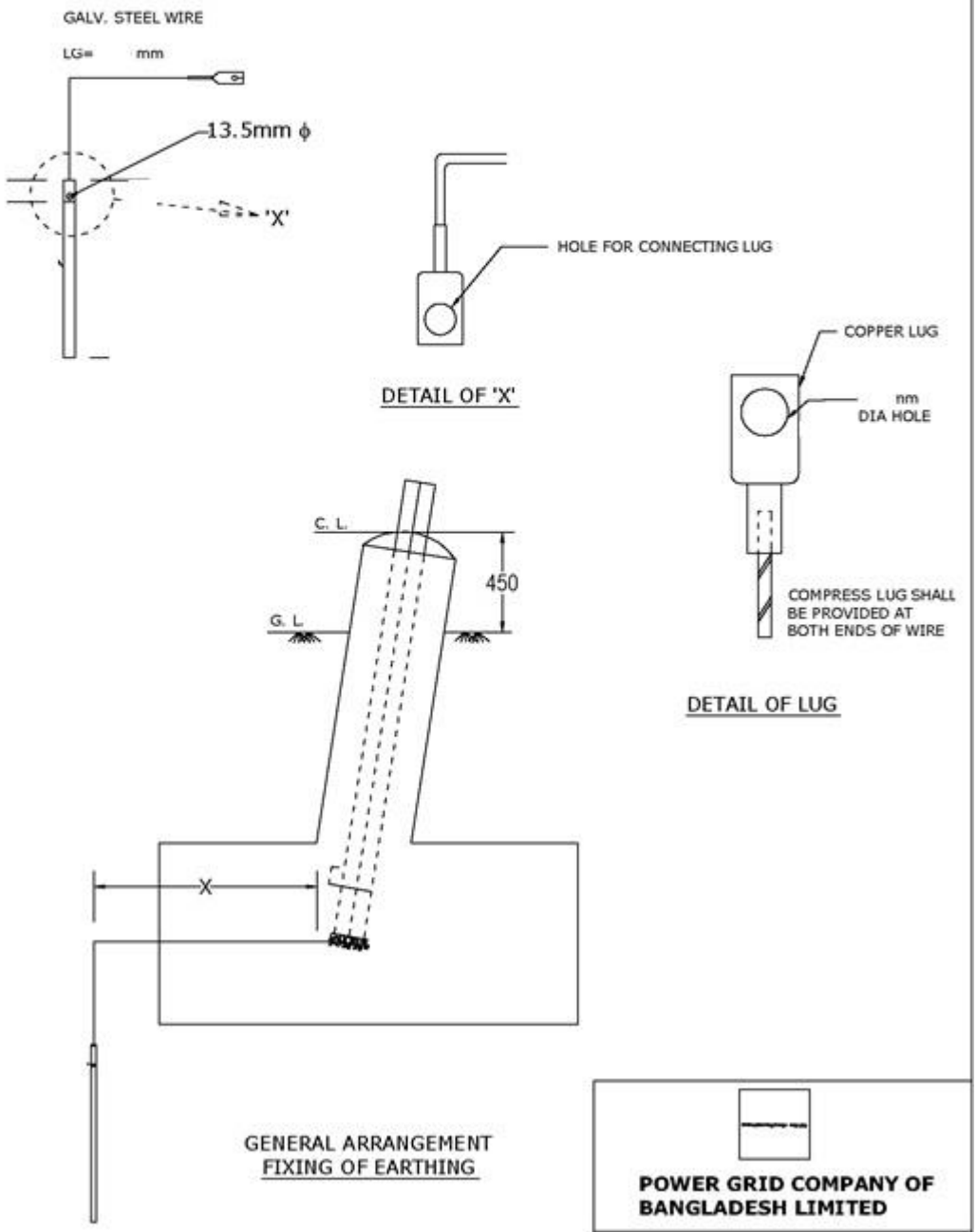

POWER GRID COMPANY OF BANGLADESH LIMITED

EARTHING ARRANGEMENT

23. Reference Data

The following documents are enclosed for tender purposes and reference only.

1 Line route data

23.1 Line Route Data

All coordinates listed in **Annex 23-1** and Route Maps in **Annex 23-2** are indicative only and meant to provide rough guideline and information on line routes.

23.2 Soil Investigation Report – Not applicable

The soil investigation report (soft copies) is indicative only and meant to provide rough guideline and information on soil data on line routes.

During execution if the soil investigation results found different values than the enclosed one, the Contractor has to do the works without any changed in the contract prices.

Annex 23-1

LILO of Cumilla (N) - Shahjibazar PP 230kV D/C TL. at Madhabpur Sub Station								
SL No.	Easting	Northing	AP No.	Angle	Mouza	Union	Thana	District
1	328069.4877	2669552.72	AP No - 01	66°56'10"LT	Baghsair	Madabhpur	Madabhpur	Habiganj
2	328023.9731	2669486.634	AP No - 02	66°21'49"RT	Baghsair	Madabhpur	Madabhpur	Habiganj
3	328186.0121	2669504.896	AP No - 03	24°48'28"LT	Baghsair	Madabhpur	Madabhpur	Habiganj
4	328654.345	2669116.787	TT No - 01		Baghsair	Madabhpur	Madabhpur	Habiganj
5	328721.1311	2669072.746	Proposed Gantry		Baghsair	Madabhpur	Madabhpur	Habiganj

LILO of Sripur - Ashuganj 230kVdoublecircuitlineat Mortoliardi								
SL No.	Easting	Northing	Code	Angle	Mouza	Union	Thana	District
1	267208.3551	2670335.223	AP-01		Narandi	Shukundi	Manohardi	Narsingdi
2	267141.1419	2670409.264	AP-02		Narandi	Shukundi	Manohardi	Narsingdi
3	267182.9796	2670436.476	AP-03	14°19'46"LT	Narandi	Shukundi	Manohardi	Narsingdi
4	266941.803	2670882.541	AP-04	54°12'57"RT	Manohardi	Shukundi	Manohardi	Narsingdi
5	267170.236	2671354.725	AP-05	48°13'41"RT	Sallabaid	Shukundi	Manohardi	Narsingdi
6	267561.82	2671466.678	AP-06	30°7'47"LT	Sallabaid	Chalak Char	Manohardi	Narsingdi
7	267755.328	2671667.658	AP-07	34°25'14"LT	Sallabaid	Chalak Char	Manohardi	Narsingdi
8	267836.802	2672154.83	AP-08	29°28'30"RT	Madhabdi Chak	Shukundi	Manohardi	Narsingdi
9	268320.666	2672753.007	AP-09	28°9'16"LT	Madhabdi Chak	Shukundi	Manohardi	Narsingdi
10	268536.665	2673883.717	AP-10	50°54'39"LT	Madhupur (Part)	Chalak Char	Manohardi	Narsingdi
11	268113.486	2674386.333	AP-11	46°38'9"RT	Madhupur (Part)	Chalak Char	Manohardi	Narsingdi
12	268135.111	2674574.964	TT-01		Madhupur (Part)	Chalak Char	Manohardi	Narsingdi
13	268141.945	2674634.573	Gantry		Madhupur (Part)	Chalak Char	Manohardi	Narsingdi

Monohordi-Bajitpur 132kV Double Circuit Transmission Line.							
SL No.	Easting	Northing	Code	District	Upazila	Union	Mouza
1	267231.7433	2670882.234	Gantry	Narsingdi	Manohardi	Shukundi	Sallabaid
2	268179.634	2674869.826	TT No -01	Narsingdi	Manohardi	Shukundi	Sallabaid
3	268229.497	2675174.99	AP No -01	Narsingdi	Manohardi	Chalak Char	Madhupur
4	268492.51	2675331.343	AP No -02	Narsingdi	Manohardi	Chalak Cha	Madhupur
5	269236.297	2675490.314	AP No - 03	Narsingdi	Manohardi	Chalak Char	Madhupur
6	270326.004	2676406.67	AP No -04	Narsingdi	Manohardi	Kanchikata	Gauribhanga
7	270593.224	2676459.823	AP No - 05	Narsingdi	Manohardi	Kanchikata	Gauribhanga
8	271087.034	2676205.733	AP No - 06	Narsingdi	Manohardi	Kanchikata	Bara Mirzapur
9	272357.487	2676611.713	AP No - 07	Narsingdi	Manohardi	Bara Chapa	Bir Maijadia
10	273259.93	2676813.91	AP No - 08	Narsingdi	Manohardi	Bara Chapa	Bharadia
11	274371.5	2676334	AP No - 09	Narsingdi	Manohardi	Bara Chapa	Bara Chapa
12	275423.29	2676956.63	AP No - 10	Narsingdi	Manohardi	Bara Chapa	Bara Chapa
13	275749.89	2676988.71	AP No - 11	Narsingdi	Manohardi	Bara Chapa	Paikan
14	276143.0506	2677227.429	AP No - 12	Kishoreganj	Katiadi	Lohajuri	Purba Char Paratala
15	276863.35	2677199.68	AP No - 13	Kishoreganj	Katiadi	Lohajuri	Purba Char Paratala
16	278098.01	2678473.24	AP No - 14	Kishoreganj	Katiadi	Lohajuri	Char Pukkhia
17	278671.17	2678483.08	AP No - 15	Kishoreganj	Katiadi	Lohajuri	Jalalpur
18	278992.21	2678693.76	AP No - 16	Kishoreganj	Katiadi	Lohajuri	Jalalpur
19	279263.25	2678654.07	AP No - 17	Kishoreganj	Katiadi	Lohajuri	Lohajuri
20	279911.57	2678852.48	AP No - 18	Kishoreganj	Katiadi	Lohajuri	Lohajuri
21	280312.03	2678654.48	AP No - 19	Kishoreganj	Katiadi	Lohajuri	Lohajuri
22	280670.22	2678703.66	AP No - 20	Kishoreganj	Katiadi	Lohajuri	Lohajuri
23	281797.78	2678688.34	AP No - 21	Kishoreganj	Katiadi	Lohajuri	Lohajuri
24	282532.14	2678778.27	AP No - 22	Kishoreganj	Katiadi	Lohajuri	Lohajuri
25	282697.15	2678882.62	AP No - 23	Kishoreganj	Katiadi	Lohajuri	Lohajuri
26	282913.25	2678842.66	AP No - 24	Kishoreganj	Katiadi	Lohajuri	Lohajuri
27	283154.63	2679048.48	AP No - 25	Kishoreganj	Katiadi	Lohajuri	Lohajuri
28	284062.2072	2679222.589	AP No - 26	Kishoreganj	Katiadi	Lohajuri	Lohajuri
29	284474.43	2680253.08	AP No - 27	Kishoreganj	Bajitpur	Halimpur	Sarar Char
30	285209.29	2680661.08	AP No - 28	Kishoreganj	Katiadi	Lohajuri	Lohajuri
31	285297	2680909.5	AP No - 29	Kishoreganj	Katiadi	Lohajuri	Lohajuri
32	285451.9	2681116.54	TT-02	Kishoreganj	Bajitpur	Halimpur	Dubai Pathar
33	285375.5	2681220	Gantry	Kishoreganj	Bajitpur	Halimpur	Dubai Pathar